DESIGN OF HAPTIC FORCE FEEDBACK FOR CATHETER INSERTION MECHANISM

A Thesis by

Nikunj Manubhai Patel

Bachelor of Engineering, Sardar Patel University, India, 2002

Submitted to the Department of Mechanical Engineering
and the faculty of the Graduate School of
Wichita State University
in partial fulfillment of
the requirements for the degree of
Master of Science

December 2006

DESIGN OF HAPTIC FORCE FEEDBACK FOR CHATETER INSERTION MECHANISM

I have examined the final copy of this thesis for form and content and recommend that it be accepted in partial fulfillment of the requirements for the degree of Master of Science, with a major in Mechanical Engineering.

_____
Behnam Bahr, Committee Chair

We have read this thesis
and recommend its acceptance:

_____
Hamid Lankarani, Committee Member

_____
Hossein Cheraghi , Committee Member

DEDICATION

To my parents, Sisters, my loving wife
And my friends,

ACKNOWLEDGEMENTS

I would like to express my sincere thanks and appreciation to my advisor Dr. Behnam Bahr for his excellent guidance, advice, precious time, and constant support throughout my graduate career at Wichita State University, without which my efforts would not have been complete and fruitful.

I would also like to express my thanks and appreciation to Dr. Hamid Lankarani and Dr. Hossein Cheraghi for their time and effort in reviewing this manuscript.

I would like to thank my wonderful wife, my great parents, my friends Mr. Chirag Patel, Rajen Pandya and Mr. Chintan Kothari who provided me with helpful insights and assisted me in finishing this work successfully. Finally I would like to thank all my friends who have helped me directly or indirectly during my graduate study.

ABSTRACT

The objective of this thesis is to design a system which can perform catheter insertion into a human body with haptic feedback. The haptic feedback will consist of a system; a surgeon can use to feel forces in his hand while performing operation from a remote distance. The addition of touch sensor will enable the surgeon to know how much force is being applied to any tissues, and he will sense the same feeling as if working on the patient during the manipulation of the catheter. In this research scale model is used to simulate the catheter insertion operation. This research also demonstrates the effectiveness of MR fluid devices in force feedback applications. Force and displacement sensors sense the environment conditions along which the end effectors of electronic actuator moves. This information is then used to control the MR fluid device to provide appropriate force feedback to user. The research done and system created intended for future research benefiting the Wichita State University's biomechanics program. Suggestions for future research are included. Problems encountered during research and solutions found are also addressed.

TABLE OF CONTENTS

Chapter Page

LIST OF FIGUREES

1. INTRODUCTION AND LITERATURE REVIEW 1

1.1 **Introduction** 1
1.2 Lierature Review 5

2. SYSTEM DESIGN OF THE HAPTIC FORCE FEEDBACK 15

2.1 Prior Research on Catheter Insertion Techniques 15
2.2 Design of Catheter Insertion Mechanism 23
2.3 Design of Haptic Force Feedback System 24
2.4 MR Fluid Tactile Force Feedback Device 30
2.5 Force Sensor 33

3. CONTROL CIRCUIT DESIGN AND PROGRAMING 35

3.1 Stepper Motor Selection and Control 35
3.2 Force Sensor Circuit 43
3.3 Control of MR Fluid Force Feedback Device 44
3.4 LabView 50

4. EXPRIMENT AND RESULT 55

4.1 Force Sensor Calibration 55
4.2 Force Feedback Results 60

5. CONCLUSIONS AND FUTURE WORK 68

5.1 Conclustion 68
5.2 Future Work 68

REFERENCES 70

APPENDICES 78

LIST OF FIGUREES

Figure Page

1.1.1 Schematic of the robotic surgical system 3

1.2.1 The Da-Vinci Surgical System 5

1.2.2 ZEUS Robotic Surgical System..... 6

1.2.3 ROBODOC surgical robot..... 7

1.2.4 NeuroMate Robotic Surgical System..... 7

1.2.5 Surgeon Console..... 7

1.2.6 Patient-side Cart..... 9

1.2.7 Detachable Instruments..... 9

1.2.8 3-D Vision System..... 10

1.2.9 PHANTOM Desktop 11

1.2.10 The Laparoscopic Impulse Engine..... 11

1.2.11 Microsoft force feedback joystick 12

1.2.12 Force feedback glove..... 12

1.2.13 Electrorheological fluid at reference and activated states 13

1.2.14 Electrically Controlled Stiffness Elements 13

1.2.15 Mounting of an ECFS actuator on the finger..... 14

2.1.1 Cardiac catheter 15

2.1.2 Cardiac Catheterization 16

2.1.3 Catheter correctly placed in right atrium under fluoroscopy guide 16

2.1.4 Telesurgery Concept 17

LIST OF FIGUREES

Figure Page

2.1.5 Remote Catheter Insertion with Haptic Force Feedback 17

2.1.6 Catheter with sensor at tip 19

2.1.7 Catheter Insertion Mechanism 20

2.1.8 Haptic Device 21

2.2.1 Catheter insertion mechanism 21

2.2.2 Catheter insertion mechanism 22

2.2.3 Catheter insertion mechanism fit with operation table. 23

2.3.1 Surgeon station 24

2.3.2 Patient station 24

2.3.3 Surgeon station 25

2.3.4 Patient station 25

2.3.5 Prototype Surgeon station 26

2.3.6 Prototype Patient station 27

2.3.7 Control system and driving circuits 28

2.4.1 Magneto rheological rotary brake 30

2.4.2 Direct-sheer mode of MR fluid 31

2.4.3 5 Nm Tactile force feedback device from lord 32

2.5.1 Force Sensor (Flexiforce Sensor)..... 33

2.5.2 Force vs. conductance (1/R) 34

3.1.1 Permanent magnet stepper motor layout 36

LIST OF FIGUREES

Figure Page

3.1.2 Bipolar stepper motor layout 37

3.1.3 Unipolar stepper motor layout 37

3.1.4 SLO-SYN M093-FF-401 Bipolar Stepper motor 38

3.1.5 Quadrature Encoder pulses A and B 40

3.1.6 D Flip flop circuit to detect Rotation Direction of Encoder 41

3.1.7 IC 7474 Dual D flip flop 41

3.1.8 Port Connection of API P51 Stepper Motor Controller 42

3.1.9 API P51 Stepper Motor Controller 42

3.2.1 Drive circuit for Flxiforce Sensor 43

3.2.2 PWM with 10%, 50% and 90% duty cycle 45

3.2.3 TIP 120..... 46

3.2.4 Driving Circuit for MR fluid tactile force feedback 47

3.2.5 PAK Vb 48

3.2.6 Circuit Connection of PAK- VB 49

3.2.7 50% and 90% duty cycle output form P0 pin of PAK-VB 49

3.3.1 LabVIEW 50

3.3.2 DAQ System 51

3.3.3 6024E DAQ board 52

3.3.4 Connector block 52

3.3.5 CB-68LP connector block 52

LIST OF FIGUREES

Figure Page

3.3.6 LabVIEW Block Diagram 53

3.3.7 Serial Port 54

3.3.8 RS232 to TTL (MAX232)..... 55

4.1.1 FlexiForce Calibration Device 55

4.1.2 Different Plots form Statistical Analysis 57

4.2.1 Surgeon Station: Measurement of resisting force 61

4.2.2 Force Vs Displacement (spring 1) 63

4.2.3 Force Vs Displacement (spring 2) 64

4.2.4 Force Vs Displacement (spring3) 65

4.2.5 Force Vs Displacement (All springs) 66

A.1 PAK - Vb 74

A.2 PCI -6024 (DAQ CARD)..... 75

A.3 MAX 232 77

CHAPTER 1

INTRODUCTION AND LITERATURE REVIEW

1.1 Introduction

WHAT IS A ROBOT? According to the Robot Institute of USA, a robot is "a programmable multifunctional manipulator designed to move materials, parts, tools, or specialized devices through variable programmed motions for the performance of a variety of tasks." Many systems that can be described as "robotic" are now used in laboratories, and some are undergoing trials in the operating room. Robotics surgery has several advantages over manual surgery. The first is that they have greater three-dimensional spatial accuracy, especially when linked to scanning technology. The second advantage of robotics surgery is its consistency and accuracy in result. The third advantage by robotics surgery is its precision compare to manual surgery. The utilization of robots in the operating room has been the most challenging application investigated in the health care field [1].

WHAT IS MIS? Minimally invasive surgery is an innovative surgical method which uses robotic system to do surgical assignment. MIS is done by instruments and viewing equipment placed in during small opening instead of by making a large cut. The main benefit of this method is the reduced suffering to healthy tissue, which is a primary reason for patients' postoperative pain. The hospital stay and rest periods, and therefore the procedure expenses, can be considerably reduced with MIS [2].

Patient benefits:

- Less pain and suffering
- Reduce blood loss

- Less post-operative soreness and discomfort
- Lowers the infection risk
- Shorter hospital stay

WHAT IS TELEROBOTICS SURGERY? Minimally invasive surgery is basically a type of telemanipulation as the surgeon is bodily separated from operational theater. So, telerobotics is a normal means to expand capabilities in minimally invasive surgery. In telerobotics surgery, surgical tool can be replaced with automatic tool which are directly controlled by surgeon from remote place. It virtually recreates the presence of a remote-surgeon at the patient's side. This is done with the help of sensors giving real time tactile, auditory and visual data from the operating site to the surgeon with 3 Dimensional vision, stereo phonic sound and tactile-force feedback. In these operations, a doctor sits at a computer console and the computer convert his hand motion into the motion of the automatic instruments. The surgical robot positioned at the side of patient, holds the camera and manipulates two or more surgical instruments. The computer console and doctor can be located at a remote place thus allowing the surgeon to operate on patients from thousand of mile across the world [2].

Telerobotic surgery was first developed by the US Department of Defense to allow surgeons to operate on wounded soldiers in the battlefield. Most of deaths occur before a soldier gets a medical facility. These deaths can be avoided since most of injuries, like hemorrhaging due to blood vessels are treatable if the operation carried out very quickly. In telerobotic surgeries, the patient is placed in vehicles equipped with the automatic robotics devices. While the surgeons at other remote sites can do life saving surgeries. Aside from the military applications; telerobotic surgery also holds much promise in the civilian sector. One can imagine

a future where a surgeon operates on patients in other country thousands of miles away, by means of telerobotic. As a result, telerobotic would allow complicated surgeries to be done by specialist doctor in places where neither the skill nor the services can be set up. Most of the success of this machinery depends on the robots that provide the remote eyes and hands of surgeon. Even though significant amount of developments in the field of telerobotics are in their early phase, quite a few well developed systems are in exercise.

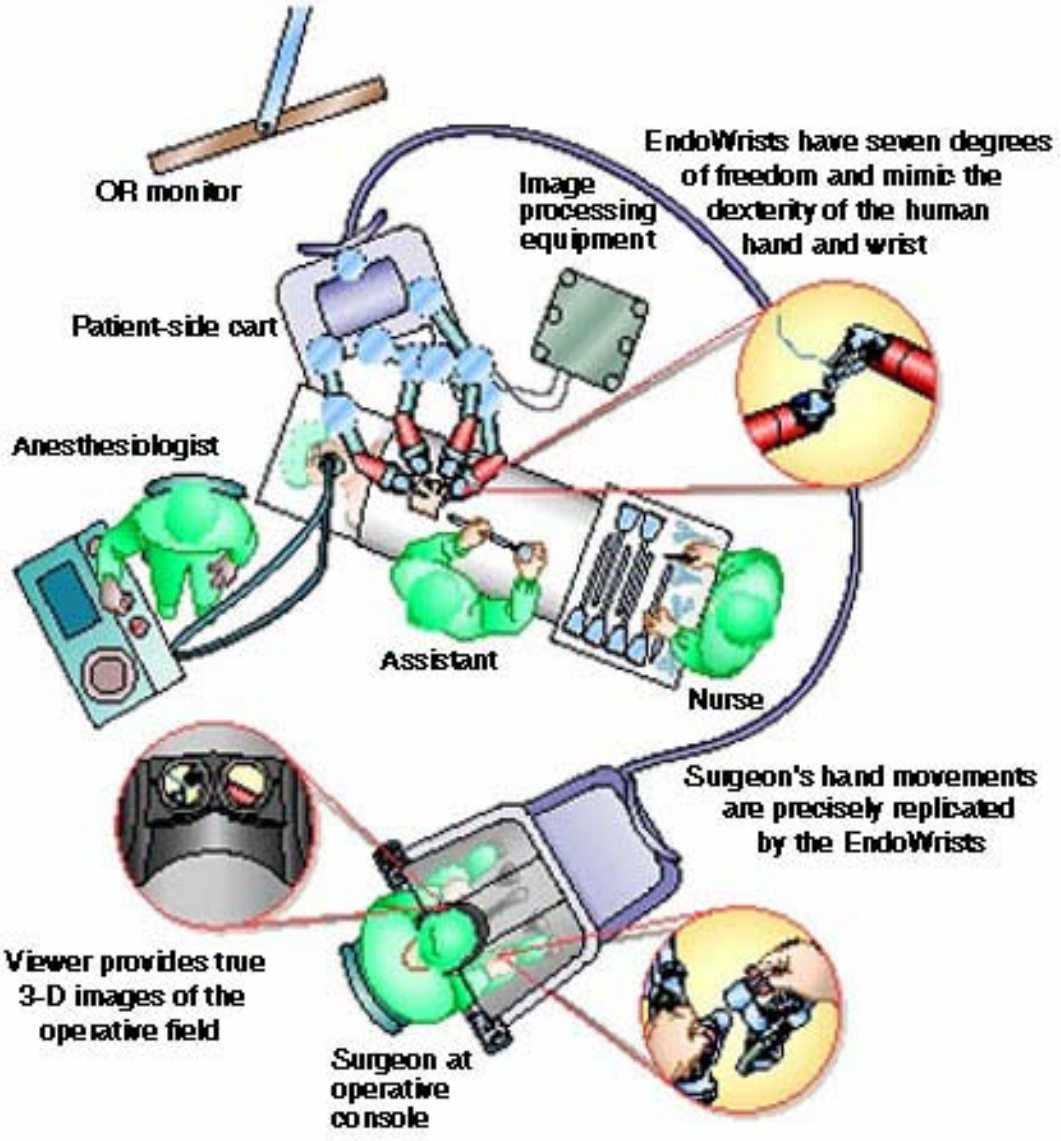

Fig: 1.1.1 Schematic of the robotic surgical system [27].

WHAT IS HAPTIC FORCE FEEDBACK? Haptic is the scientific field that deals with sense of touch. A haptic tool gives people a feel of touch in computer generated virtual environments, so when virtual items are touched, they appear actual and touchable. For example in medical training simulator doctor can feel a blade cut through virtual skin and sense a needle push through virtual bandanna or experience a drill force through drilling virtual bone. All of these types of relations can experience about impossible to differentiate from the real life interactions the simulator emulates. Haptics is appropriate nearly in all fields of computing as well as video games, medicinal teaching, CAD/CAM, animation, engineering analysis, architectural design, virtual toy, remote guided vehicle and robotics.

In our day to day life, we control a variety of equipment with knob button, and sliders. Most of them are mechanically control like steering wheel of car or some kind of leave. This kind of operation needs some kind of light manual force to control system, there by giving its users a force feedback. Normally the feedback can be in visual or acoustic form. This is also the case for most electronically controlled equipment. This cause approximated and usability troubles due to of the subsequent reasons:

- we are used to have a feedback of what we touch
- we are confronted with too much of visual information
- we learn things better if we have a touch control

1.2 Literature Review

Current Robotics Surgery Systems

The Da-Vinci Surgical System: The "Da-Vinci" is a Surgical System designed ergonomically with surgeon's console and a patient side cart with 4 robotic arms. It also consists of the high performance Vision System provided with Endo Wrist Instruments. Driven by high-tech

automatic technology, the surgeon's hand motion are scaled, filtered and faultlessly converted into exact movements of the Endo-Wrist Instruments [3].

Fig: 1.2.1 the Da-Vinci Surgical System [3].

ZEUS Robotic Surgical System: Zeus is a robotic system used for surgery. This system consists of two different modules. One is called master-console and other is called slave-robotics device. Surgeon can sit at master-console thousands of miles away from slave-robotics device and perform the operation at slave-robotics station. The main advantages of this technology are listed bellow [9]

- The exhaustion issue is considerably reduced as the doctors does not have to hold instrument constantly for a long time.
- The robotics device follows the path as per surgeon's instruction. Also this advance technology filter out the vibration or shake during surgery. By means of this instrument

the micro-movements can be achieved by scaling the surgeons had movement which is impossible for human.

- During operating as the cut required for operation is very small, it result in low suffering and fast recovery.

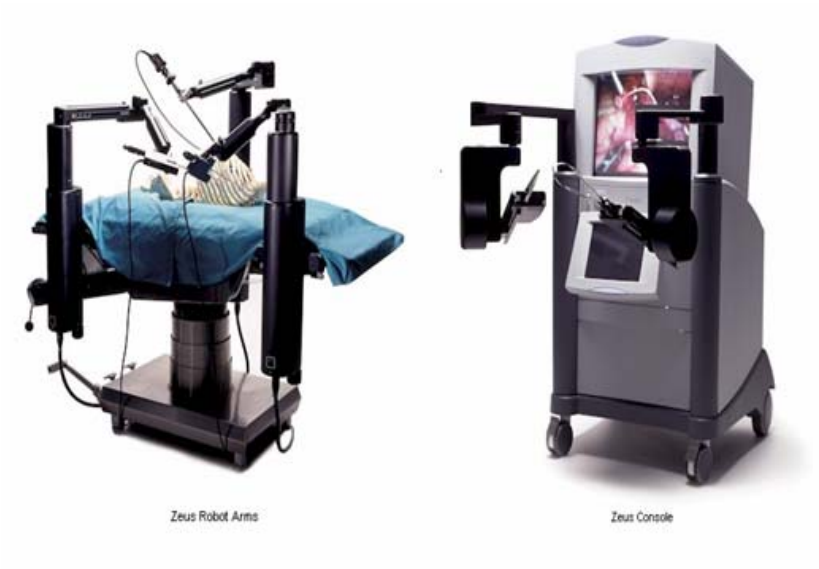

Fig: 1.2.2 ZEUS Robotic Surgical System [9].

ROBODOC Surgical Robot: ROBODOC is a surgical-robot which is used for primary total hip replacement, revision hip replacement and total knee replacement. (Integrated Surgical Systems)

Fig: 1.2.3 ROBODOC surgical robot [10].

NeuroMate Robotic Surgical System: NeuroMate is an image-guided robotics surgery system used for brain surgeries. It also consists of a pre-surgical planning workstation where surgeon can plan his surgery procedure before the real operation. The NeuroMate System controls the surgical tool with the surgical field as planed by surgeon at the image planning station. The systems communicate with the surgeon during surgery and perform the change required during the surgery [10].

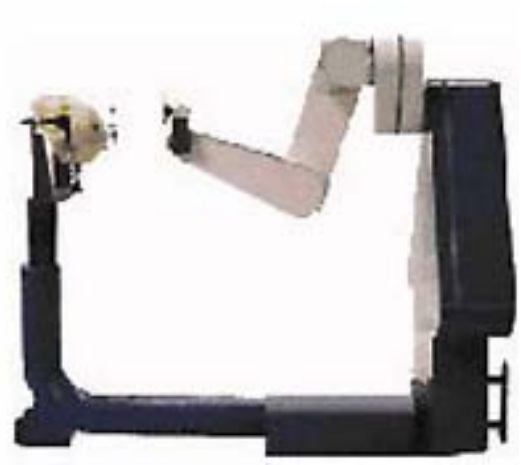

Fig: 1.2.4 NeuroMate Robotic Surgical System [10].

Robotics Surgical System Overview:

Robotics Surgical Systems consists of four main components:

- The surgeon console
- Patient-side cart
- EndoWrist Instruments
- Insite Vision System

Surgeon Console: This is the remote station where the surgeon can seat and control the robotics manipulator several feet or thousands of mills away. The surgeon console consists of vision system where surgeon can get the 3 dimensional image of surgical field in real time. It

also consists of master interface by which the surgeon can control the end effectors of robotics manipulator.

Fig: 1.2.5 Surgeon Console [3].

Patient-side Cart: This is the station where the real operation takes place. This system consists of robotics arms that directly contact the patient. Normally this kind of patient side cart consist two or three robotics arm to hold surgical tool and one endoscope arm.

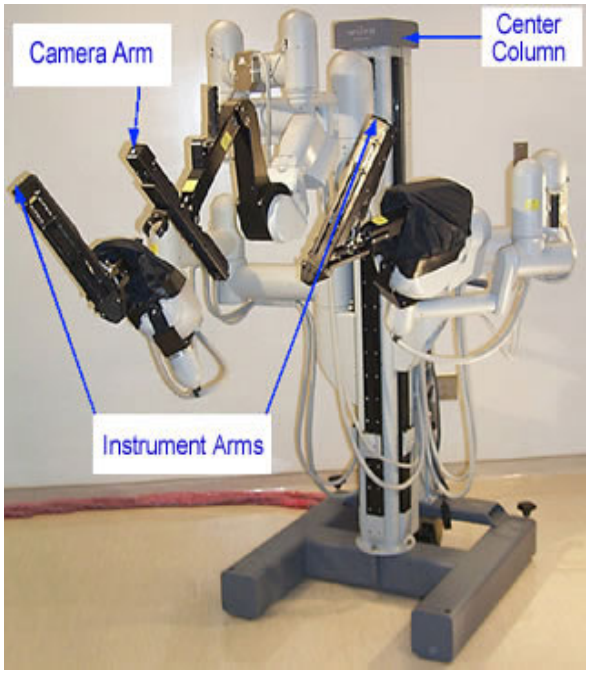

Fig: 1.2.6 Patient-side Cart [3].

Detachable Instruments: Detachable instruments are end effectors of robot manipulator used for surgery. For different kind of operation different detachable instruments are required. These instruments are design such that they can be easily replaced from manipulator. Some of devices are capable of rotation of 360 degree which is not possible for human hand.

Fig: 1.2.7 Detachable Instruments [3].

3-D Vision System*:* As we discuss before the patient cart consist of one endoscopic arm. This endoscope arm provides enhanced three-dimensional images. This image gives a surgeon real feel as he is doing surgery on spot.

Fig: 1.2.8 3-D Vision System [3].

Haptic Force Feedback in Robotics Surgical Systems: During operation the surgeon is physically separated from the workspace, as the surgeon is away from surgeon console several

feet to thousands of miles away from the patient operating table. Despite of the advantage of robot assisted MIS the lack of force sensory and force feedback is one severe drawback of currently available systems. Especially for the introduction of autonomous skills like knot-tying, recorded and reproduce-forces are essential. Due to these restriction two major problems arises in such procedures. Increase tissue trauma and frequent suture material damage [11]. These days many haptic force feedback devices are available. Each has different working principle. Joystick with force feedback is very common these days used in games. Also some other type of devices like haptic gloves is also famous. They have different working principle. Some are working of servo actuators and some on smart materials. Some of the haptic devices used for different application are listed bellow [12].

The PHANTOM: PHANTOM is a popular haptic device. It is develop by SensAble Technology. In this device position and orientation of pointer is measured by rotating encoders in the robotic arm. The forces in all three directions are achieved by motors that apply counter torques at each joint of the robotic arm [12].

Fig: 1.2.9 PHANTOM Desktop [12].

The Laparoscopic Impulse Engine: The Laparoscopic Impulse Engine from Immersion Corporation has 5 degrees of freedom for motion and tracking with 3 degrees of freedom providing feedback. It has been designed as an input/output device for virtual reality simulations of laparoscopic and endoscopic surgical procedures [13].

Fig: 1.2.10 The Laparoscopic Impulse Engine [13].

Microsoft Force Feedback Joystick: Inexpensive force feedback device. Potential applications in simulated in "needle" procedures and relatively easy to program.

Fig: 1.2.11 Microsoft force feedback joystick [13]

Force feedback glove: The force feedback glove is consisting of actuators at each joint of glove which gives opposite movement to hand in same way an object is grip between figures. So even

if the real object is not there in the hand, the actuators apply resisting force at each join such that the operator can feel the force with force feedback glove [14].

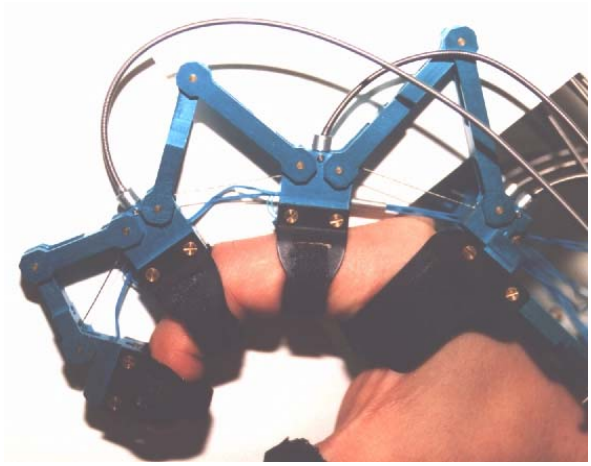

Fig: 1.2.12 Force feedback glove [14].

Haptic Interfaces Using Electrorheological Fluids

Electrorheological Fluids: Electrorheological fluids are fluids whose rheological properties like viscosity change in electric field. If the electrical field is applied to electrorheological fluid, their state changes form Newtonian oil to non-Newtonian Bingham plastic. In the absence of electrical field, the electrorheological fluid has a linear relationship between stress and strain. In presence of electrical field its behaves like a solid [15].

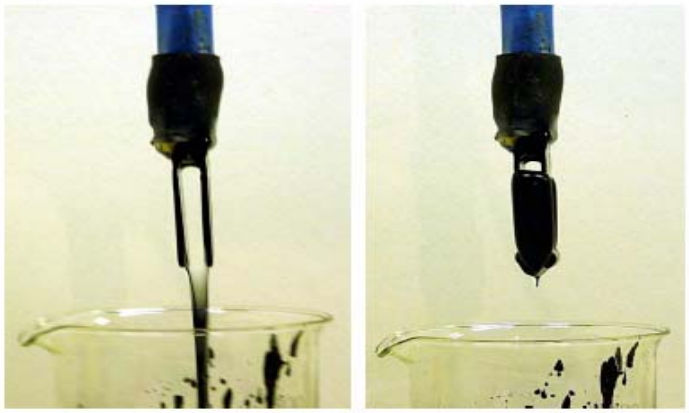

Fig: 1.2.13 Electrorheological fluid at reference (left) and activated states (right) [15].

Electrically Controlled Stiffness Elements: Electrically controlled stiffness elements are used for developing haptic feedback devices. The working principle is very simple. It consists of a slotted piston as shown in figure 1.2.14. The Piston can slide in side the cylinder. Also the piston has an electrical coil inside the body as shown in figure 1.2.14. In absence of electrical field the fluid can easily pass as in liquid form. But as the electrical field change the viscosity of fluid get change and resisting force to move the piston also get change.

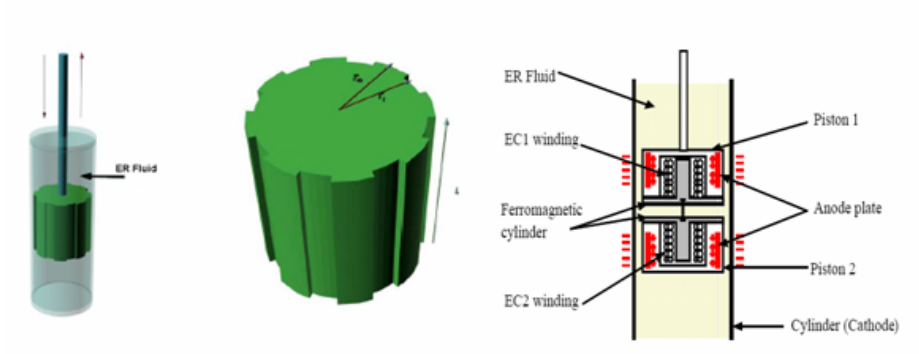

Fig: 1.2.14 Electrically Controlled Stiffness Elements and ECFS actuator [15].

The ECFS are placed at the joint of the fingers. So by changing the electrical field the resisting force to move the joint can also be controlled.

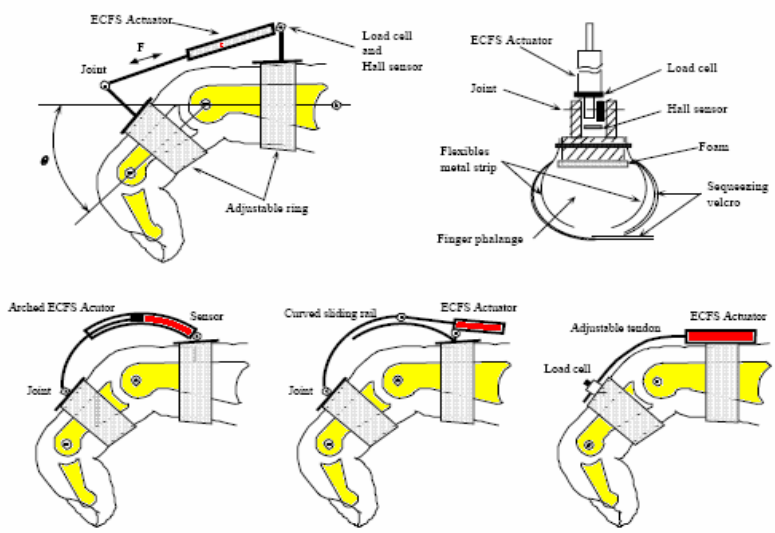

Fig: 1.2.15 Mounting of an ECFS actuator on the finger phalange and Different exoskeleton mechanisms [15].

CHAPTER 2

SYSTEM DESIGN OF THE HAPTIC FORCE FEEDBACK

2.1 Prior research on catheter insertion techniques

What is Catheter? : A catheter is a tube like device that a surgeon inserts in to human body for diagnosis and other operation. The process of inserting a catheter is called "Catheterization". Figure 2.1.1 shows a typical catheter system.

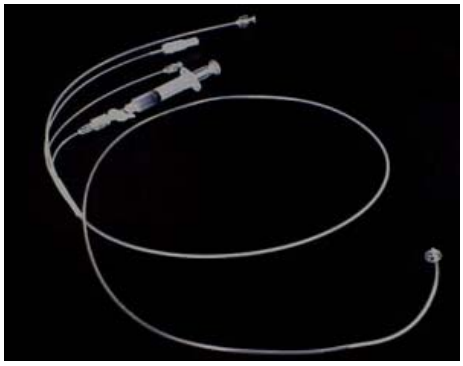

Figure 2.1.1 A Typical Cardiac Catheter [11].

Cardiac catheterization is a MIS in which a catheter is inserted into the heart, through a blood vessel from the leg or arm. Once inside the heart, it can be used to diagnose a problem or to treat a problem. By gaining access to the beating heart, cardiac catheter allows a physician to check the internal blood pressure of the heart, assess blood supply, view the coronary arteries on the surface of the heart and (depending on whether another test is done) the aorta, and check the level of oxygen in the blood. Cardiac catheterization is one of the most accurate tests in the diagnosis of coronary artery disease, and over a million of them are being done each year. During cardiac catheterization, the catheter is inserted through a very small cut made by the physician (in the groin, arm or wrist), then guided up through the blood vessel to the heart. The physician tracks the course of the catheter by watching it on a fluoroscope, an X–ray machine

that displays the catheter and blood vessels in real time on a screen. A variety of measurements may be performed when the catheter is in place, and then the catheter is removed. After about six hours of recovery time, most patients are free to go home. Results should be available within a matter of hours.

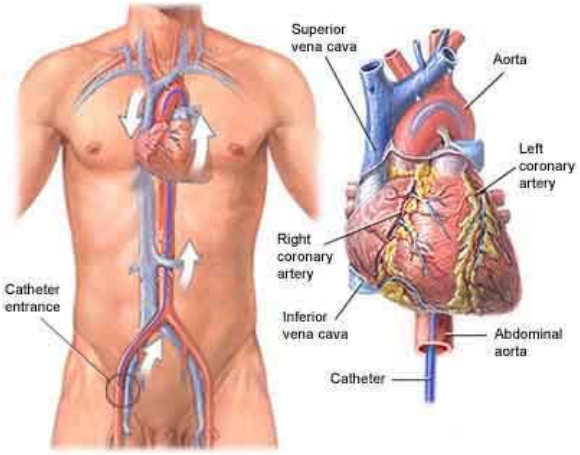

Figure 2.1.2 Cardiac Catheterization [16].

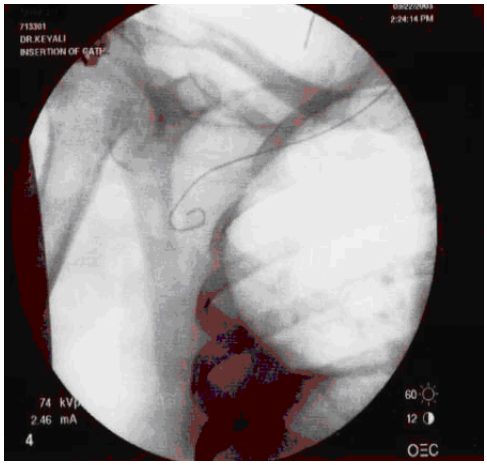

Figure 2.1.3 Catheter correctly placed in right atrium under fluoroscopy guide [28].

A typical catheter insertion process is a manual insertion process done by the surgeon. One of the problems of this process is that the surgeon is protected by a heavy lead apron that is supposed to protect him from the radiation from X-ray machine; however, his face and hands are still exposed to indirect radiations. The exposure to X-ray can be eliminated by tele-presence

operation. The catheter insertion process with a haptic feedback gives the sensory feeling that the surgeon's hands need to perform his/her task.

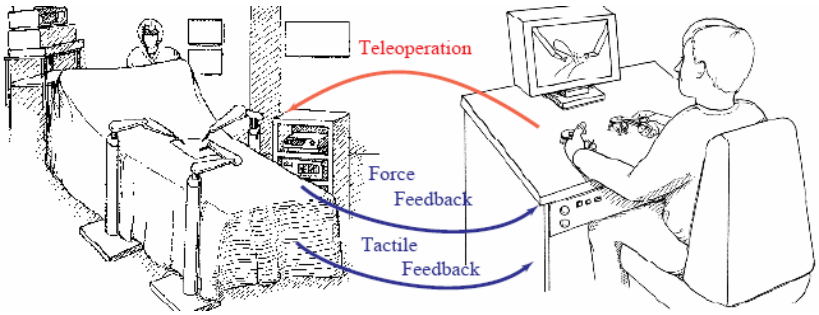

Figure 2.1.4 Tele-surgery Concept [29].

Remote Catheter Insertion System: A haptic catheter system can be divided into several parts:

- Embedded sensor in the catheter
- Imaging system
- Catheter Insertion Mechanism
- Haptic system for sensing force

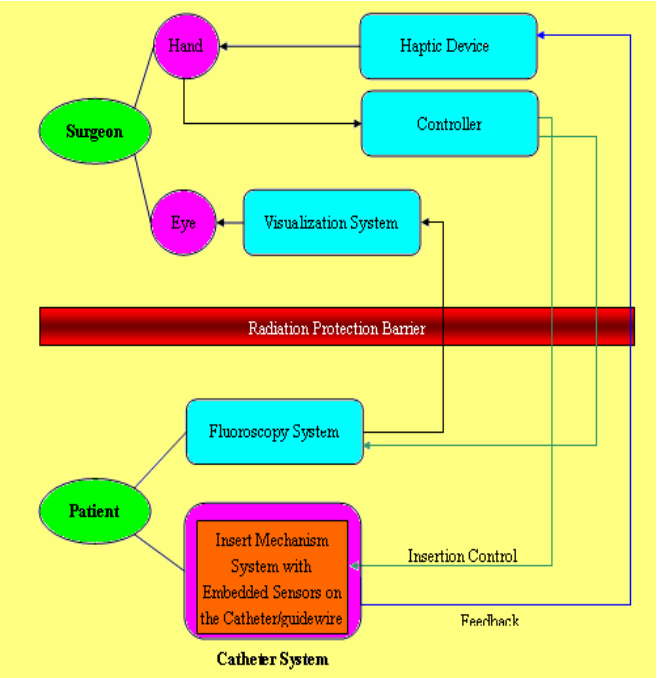

Figure 2.1.5 Remote Catheter Insertion with Haptic Force Feedback

Embedded Sensor Systems: Force feedback is a very important cue during surgical operations and the lack of it can have severe consequences for the patient. It is therefore important to provide sensitive force and displacement feedback to the surgeon. When a catheter is inserted into the body, it is important to sense the amount of contact between the catheter and blood vessel wall. Few researchers have tried to develop such a master/slave system which has good force-feedback function and can be used in actual clinical surgery. The master/slave manipulation system is controlled by designing a bilateral control algorithm using force-reflection. When the master arm is moved, the system detects the pose of the arm and the slave arm is moved accordingly. When the slave forceps grippe an object, the force with which the object is being gripped, is detected by changing the electrical current of the motor that controls the opening and closing of the slave forceps. This electrical current is then used to generate the force on the master forceps against the movement to close them. The reaction force, which is generated when the slave forceps touches an object is generated and displayed to the operator in a similar manner. However, this sensor may not be sufficiently sensitive to be used with a catheter insertion mechanism. The first sensing method is implementing a micro optical pressure sensor at the end of the catheter and guide wire. While the catheter is being inserted, if the tip of the catheter or guide wire touches the side wall of the vein the sensor will measure push force and the signal will be sent to the surgeon's hand for haptic feedback. For example, catheter design by AXIOM has an inbuilt sensor on the tip of catheter as shown in Figure 2.1.6. Designed with a 2.1 mm diameter, the catheter-type is very effective for narrow areas such as blood vessels and internal organs. Because of its simplicity and similarity with current medical instruments, this type has been used in various fields of medical research including the following:

- **Urology:** Measurements of tissue from the urinary tract, bladder, vagina, prostate, and corpus cavernosa penis for research on incontinence, BPH, and impotence
- **Obstetrics & Gynecology:** Research on cervical ripening with measurements of the cervix during pregnancy
- **Cardiology:** Dynamic measurements of the ventricular walls of the heart and of surrounding arterial walls
- **Thoracoscopy:** Stiffness of pulmonary nodules in lung cancer patients
- **Dermatology:** Oedema measurements
- **Surgery**: Measurements of the brain surface

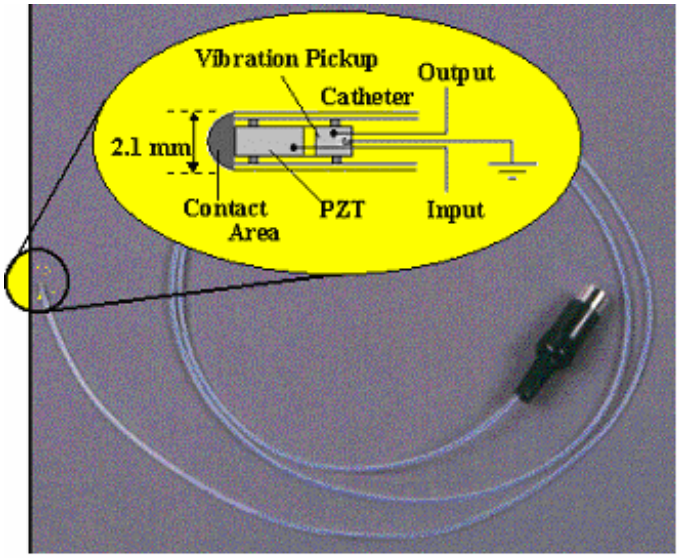

Figure 2.1.6 Catheter with sensor at tip [30].

Imaging System: Multiple 2-D views, obtained from one or more camera/s or sensor/s, allow us to reconstruct 3-D structure of a scene. For example, in X-ray angiography imaging, multiple views facilitate better artery visualization and minimize physician's exposure to X-rays. In addition, 3-D visualization assists the physician in performing the surgery on humans and animals. Interactive guidance of surgical instruments (such as probes) into targets (such as

human organs) requires precision and accuracy sufficient to avoid nearby sensitive and critical locations.

Catheter Insertion Mechanism: Micron level precision is required to move and manipulate a catheter through blood vessels. The picture of the first model of the insertion mechanism is shown in Figure2.1.7 This mechanism can insert and move catheter to desired location by precision motors, tested at Department of Medicine, Allgemeines Krankenhaus St Georg, Hamburg, Germany [17].

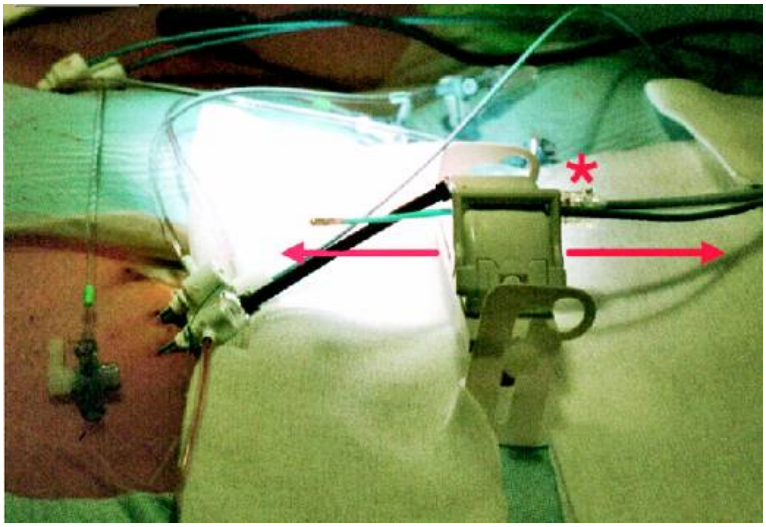

Figure 2.1.7: Catheter Insertion Mechanism [17].

Catheter Insertion Mechanism is fixed to the patient's right groin. An arrow is inserted to demonstrate the possible remote-controlled movements of the catheter. The star depicts a sterile connection with an inner metal rotating shaft that transfers the motor drive actions to the catheter.

Haptic Device: Many kinds of haptic devices have been developed in past several years, but haptic devices are developed for the training purposes only. Nowadays, haptic feedback is finally applied to the robotic surgery assistant system. At Department of Medicine, Allgemeines

Krankenhaus St Georg, Hamburg, Germany, for remote insertion mechanism as explain above, they use joy stick to guide catheter as shown in following figure 2.8.1.

Figure 2.1.8 Haptic Device [17].

2.2 Design of catheter insertion mechanism

To insert the catheter in human body two degree of motions are required, one is linear direction to push the catheter in to the body and second is rotation about its own axis to direct it to different vanes. Micron level precision is required to move and manipulate a catheter through blood vessels. The picture of the first model of the insertion mechanism design at Wichita State University is shown in the figure. This mechanism can insert, remove and rotate the catheter to desired location by precision motors.

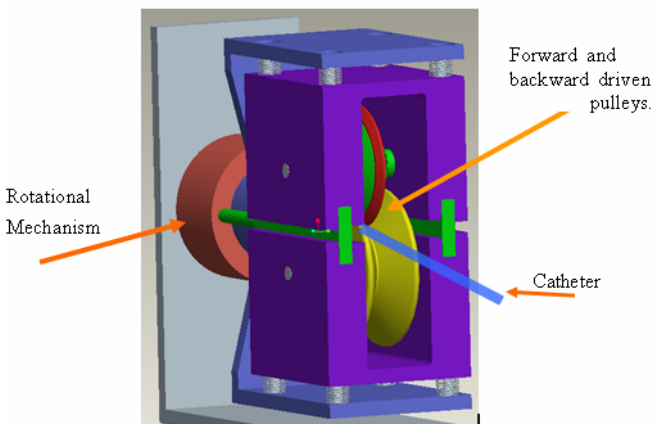

Figure 2.2.1 Catheter insertion mechanism

As the catheter is of very soft material, variable force is needed to grip it. Also applying more force to grip may damage the catheter, the precautions are made to apply gripping force in new design. (Thorsten Alexander Kern)

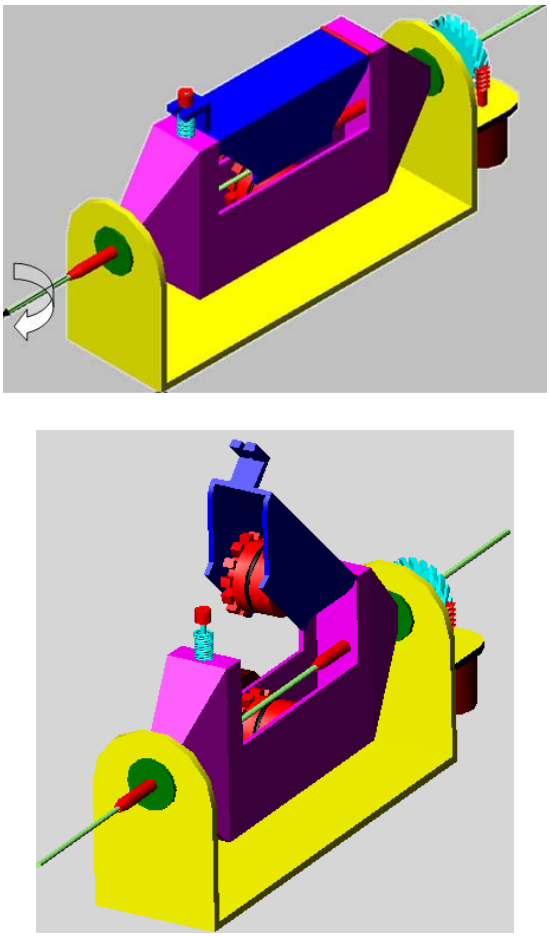

Figure 2.2.2 Catheter insertion mechanism

In this mechanism, two motors are used, one for pushing the catheter and second is to rotate the catheter. The rollers have a slot and they are connected with the spur gear so that both rollers have same velocity and better grip on catheter. The gripping force can be set by varying the spring force. Nozzles, at the both ends, direct the catheter in to specific direction. Some mechanism is required to tilt above mechanism to some angle so that it's easy to insert the catheter in human body. Also this mechanism should fit to side of operation table.

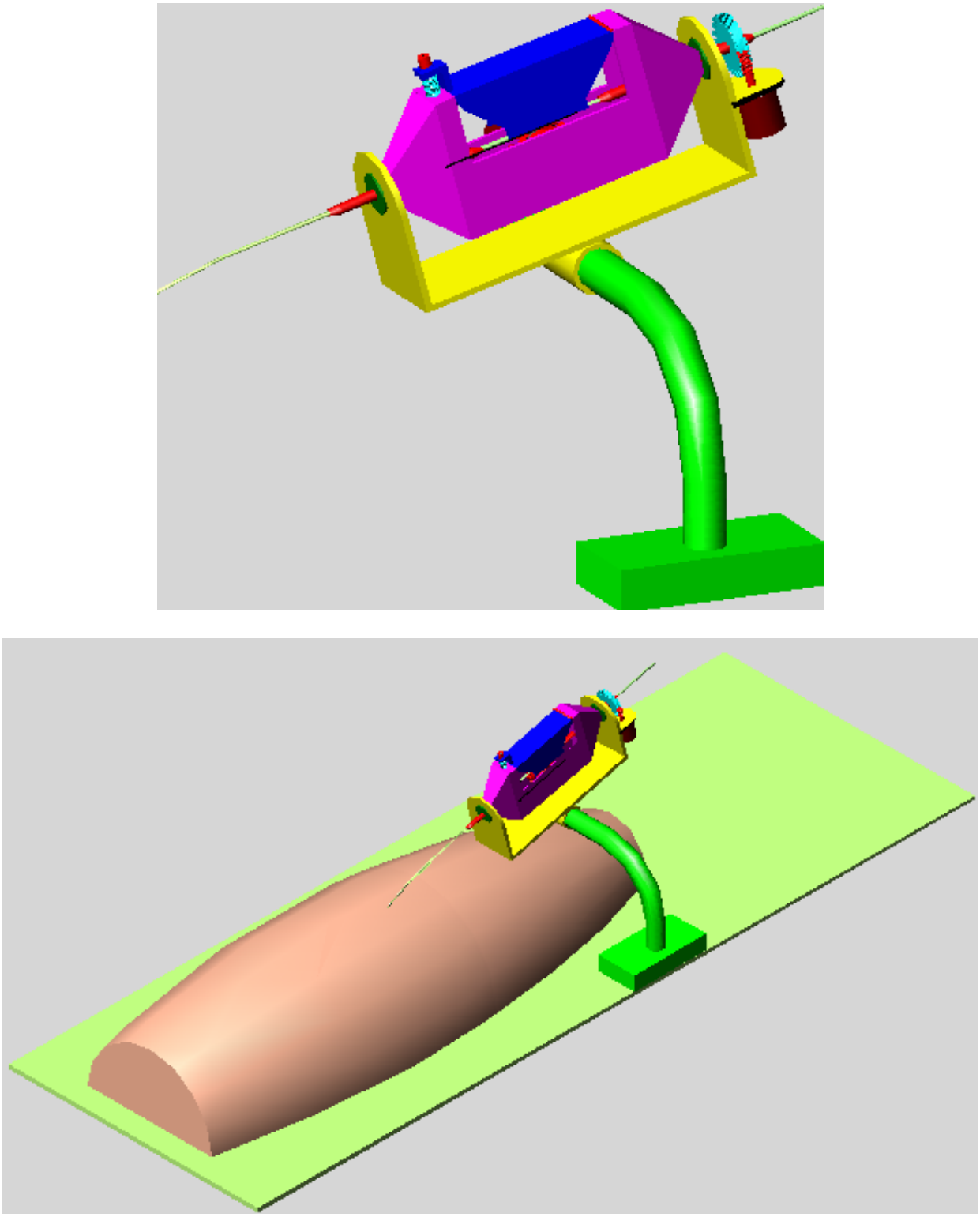

Figure 2.2.3 Catheter insertion mechanism fit with operation table.

2.3 Design of haptic force feedback system

Main objective of this thesis is to design a force feedback system by which the surgeon can feel the force in his hand. For better understanding and simplicity of system **we** design a scale model which work similar to actual system.

Experimental Setup:

- Instead of catheter **we** use a simple rod. A rod is manually feed between two rollers. This system simulates the remote place (Surgeon station) from where the surgeon is operating the catheter.

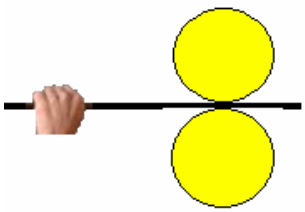

Figure 2.3.1 Surgeon station

- At the other end as shown in figure, two rollers connected with motor are feeding the rod. This system simulates the catheter inserting mechanism (Patient station) which can insert the catheter to human body.

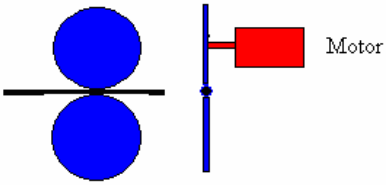

Figure 2.3.2 Patient station

- At Surgeon station there should be some device required to apply variable resistance on rotor so that the operator can feel the force. Also some kind of sensor is required so that the amount of rod move at Surgeon station and Patient station is of same amount.

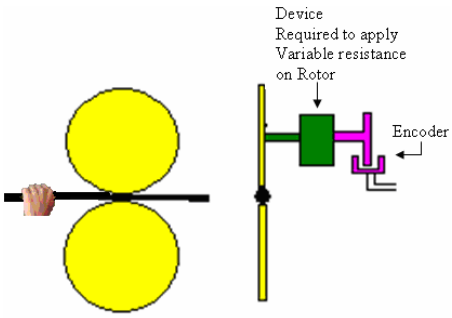

Figure 2.3.3 Surgeon station

- At Patient station there should be some mechanism required to sense the force on that rod as the motor feeds the rod. As shown in figure as the road push the spring, force acting on the road is increase as the spring get compressed. This can be measure with force sensor. This system simulates the force acting at the end of catheter.

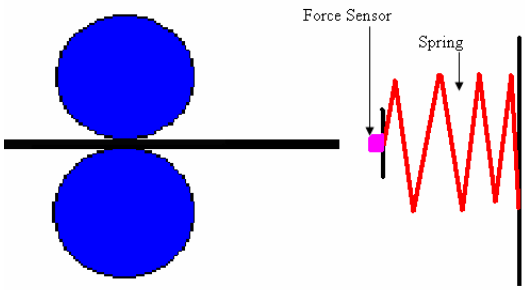

Figure 2.3.4 Patient station

Tactile Feedback Device: At Surgeon station some force feed back device required. We use MR technology for force feedback system. Magneto-rheological (MR) fluids respond to a magnetic field with a dramatic change in rheological behavior. These fluids can reversibly and instantaneously change from a free-flowing liquid to a semi-solid with controllable yield strength when exposed to a magnetic field. With MR fluid in side MR brake, rotor rotates freely in absence of Magnetic field. But as the coil is energized magnetic field is generated cause the iron partial in MR fluid to form a chain, crating a resistive torque proportional to current flows in coil.

Surgeon station: This is the actual set up for Surgeon station. As we already discuss from Surgeon station operator manually feed the rod. We can see the MR force feedback device. We will discuss working of this device shortly. The device has inbuilt encoder by which we can find how much the rotor is rotating when we feed rod in it.

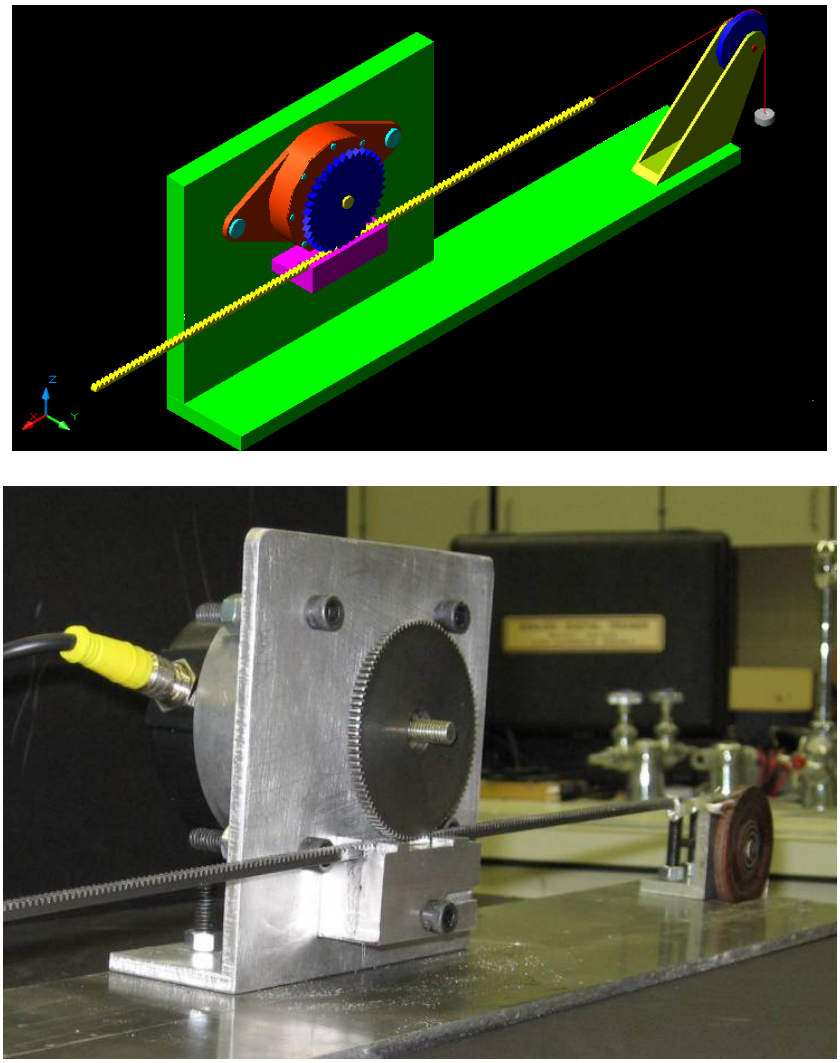

Figure 2.3.5 Prototype Surgeon station

Patient station: At Surgeon station as the operator inset rod, rod at Patient station is feeded by tow rollers operated by stepper motor. As shown in figure as the rod pushes the spring, counter force acting on catheter increase which can be sense by sensor.

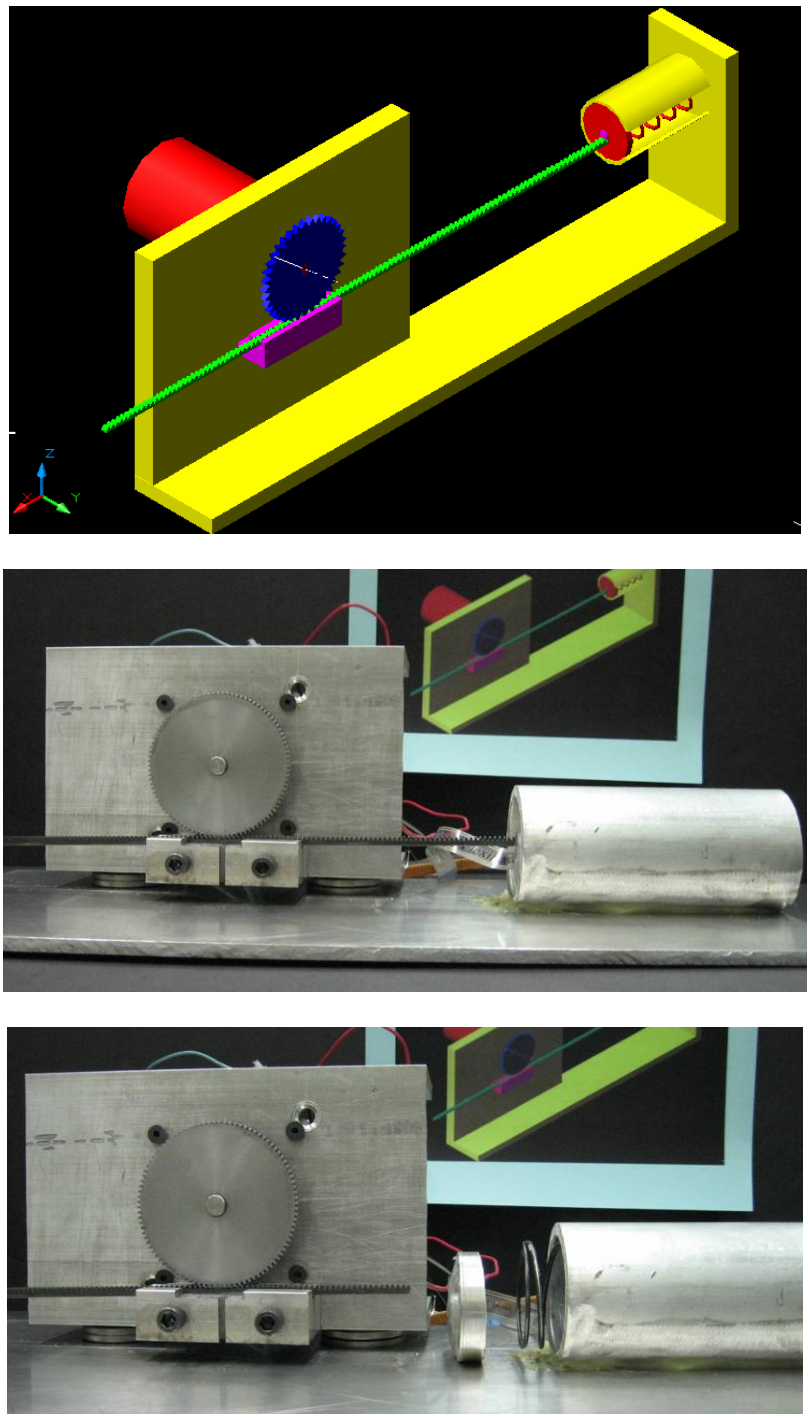

Figure 2.3.6 Prototype Patient station

Control System: Surgeon station and Patient station are connected in close loop control system. As operator push rod in roller, roller rotates and encoder gives signal according to angle of rotation. Control circuit read the encoder and gives signal to stepper motor to rotate it in same

amount. As the rod at station B push the force sensor the sensor signal is generated depending on force magnitude and this signal is read by control circuit. Relative control signal is released to force feed back device, so it get energized according to signal and operator at Surgeon station can feel the force acting on the end of rod at Patient station. The close loop system is shown in following figure.

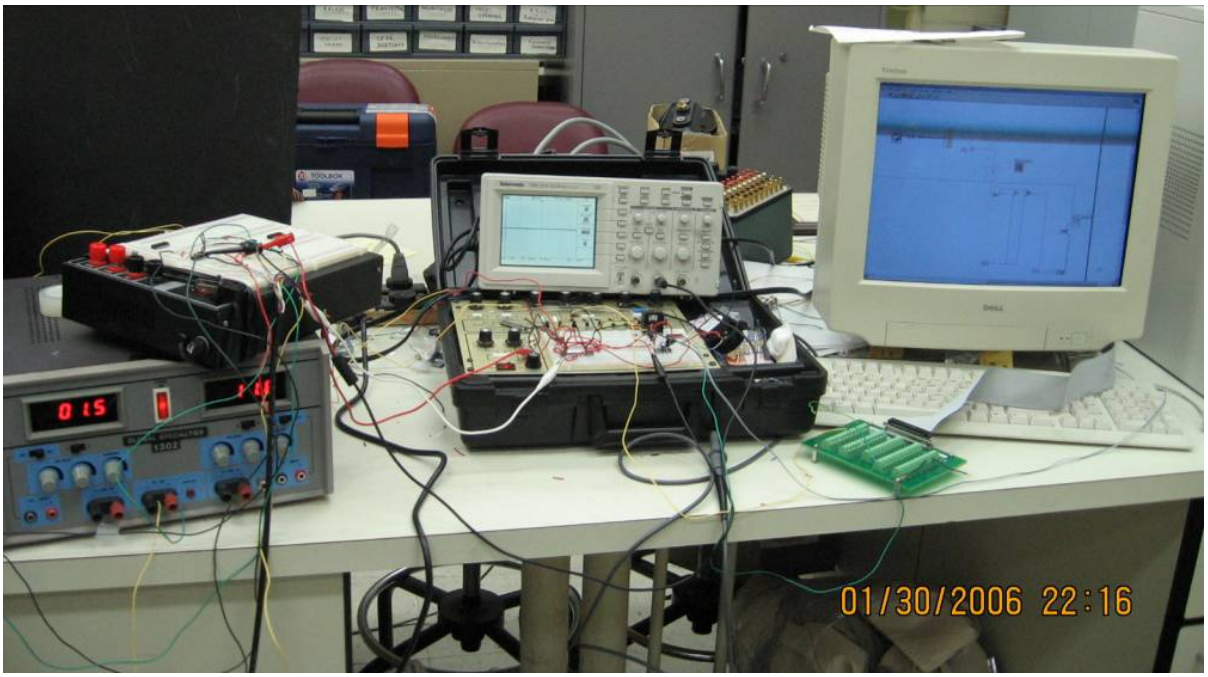

Figure 2.3.7 Control system and driving circuits

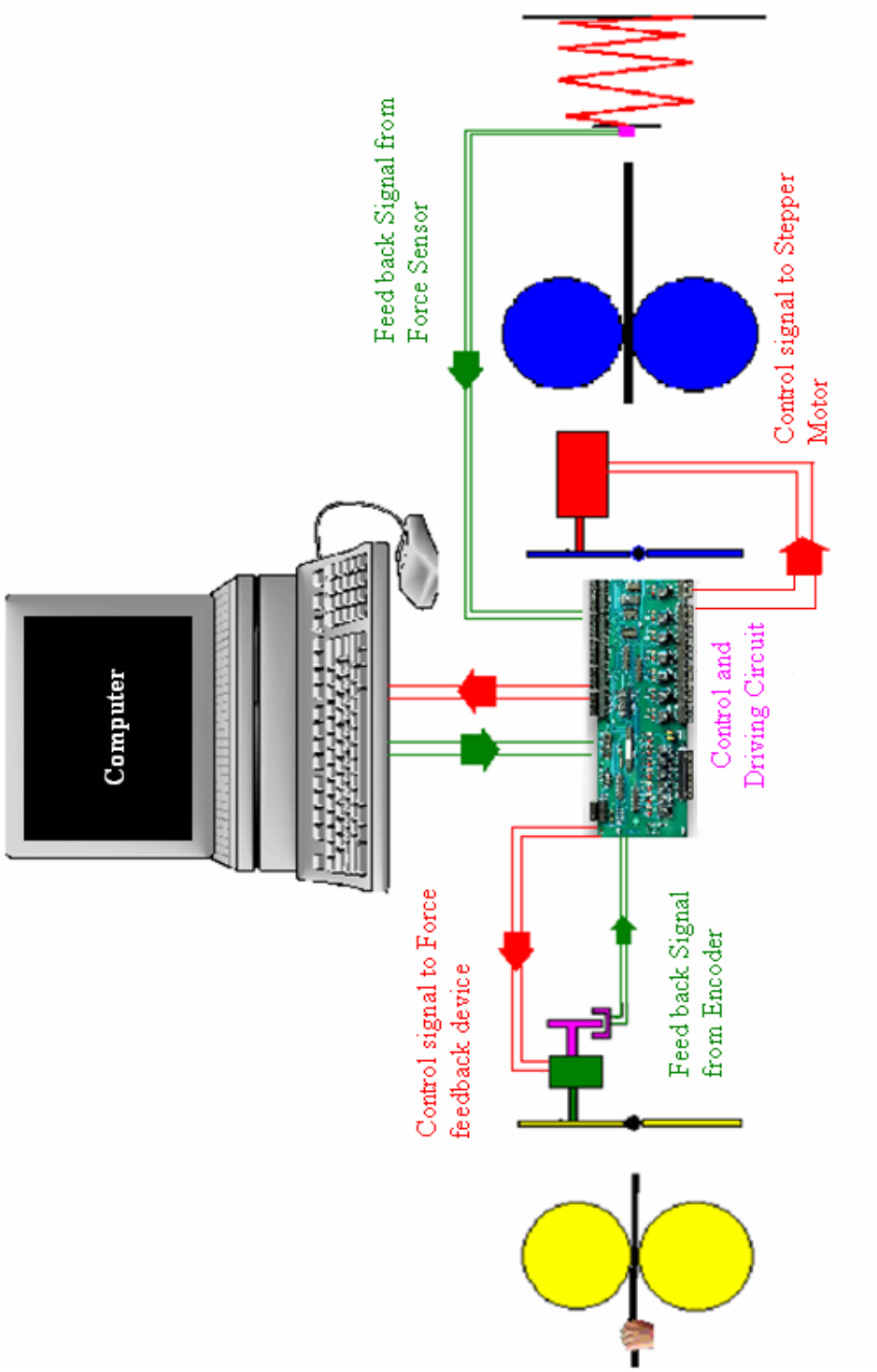

Figure 2.3.7 Control system and driving circuits

2.4 MR fluid tactile force feedback device

Construction of MR force feedback device is shown in figure It consists of rotor (3) fixed to the shaft (6), which is placed in bearings (5) and can rotate in relation to housing (4). Wires (1) allow supplying electric current to the coil (2). Between rotor and housing there is a gap (7) filled with MR fluid (8). Construction of the brake and location of the coil makes the gap to be in the magnetic field generated by the coil [19] [20].

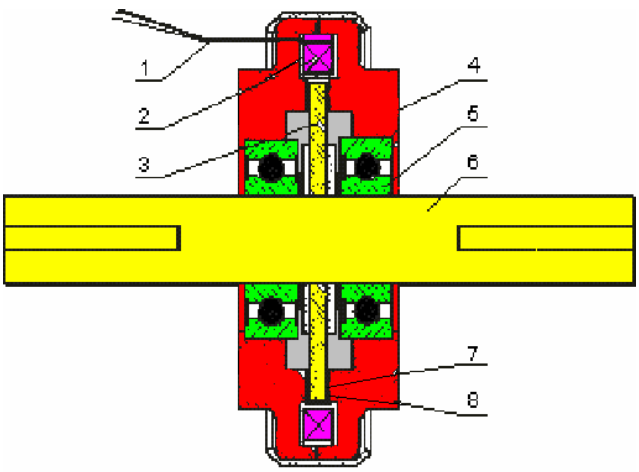

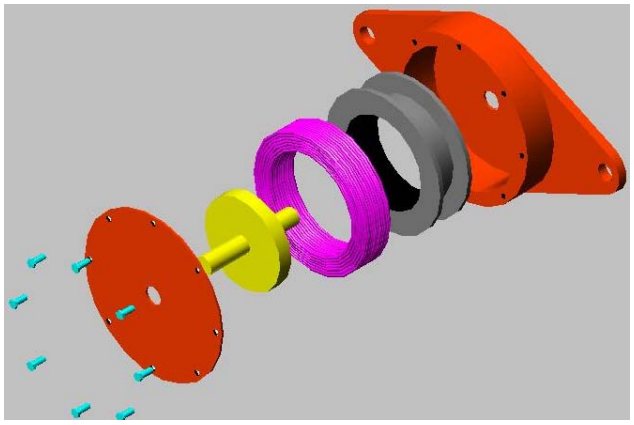

Figure 2.4.1 Magneto rheological rotary brake. 1 - Wires, 2 - coil, 3 - rotor, 4 - housing, 5 - bearing, 6 - shaft, 7 - gap, 8 - MR fluid

Operation of MR fluid tactile force feedback device: MR fluid being in tactile force feedback device is suspension of magnetic particles in the liquid (water, oil or some other kind of liquid). Magnetic particles are dissipated in the liquid when field strength is equal to zero (H = 0) but when the field strength is grater then zero ($H \neq 0$) particles are magnetised, they gather in chains and make liquid flow through them to be difficult [19][20].

Operation of MR tactile force feedback device is based on the effect (called MR effect) described above. MR fluid changes viscosity when it is in magnetic field. Figure shows MR fluid in the gap during working in clutch (direct-sheer) mode, when there is magnetic field applied. This kind of working takes place in the brake. Fluid is cut by two surfaces moving in the different directions. In the brake these are surfaces of housing and rotor.

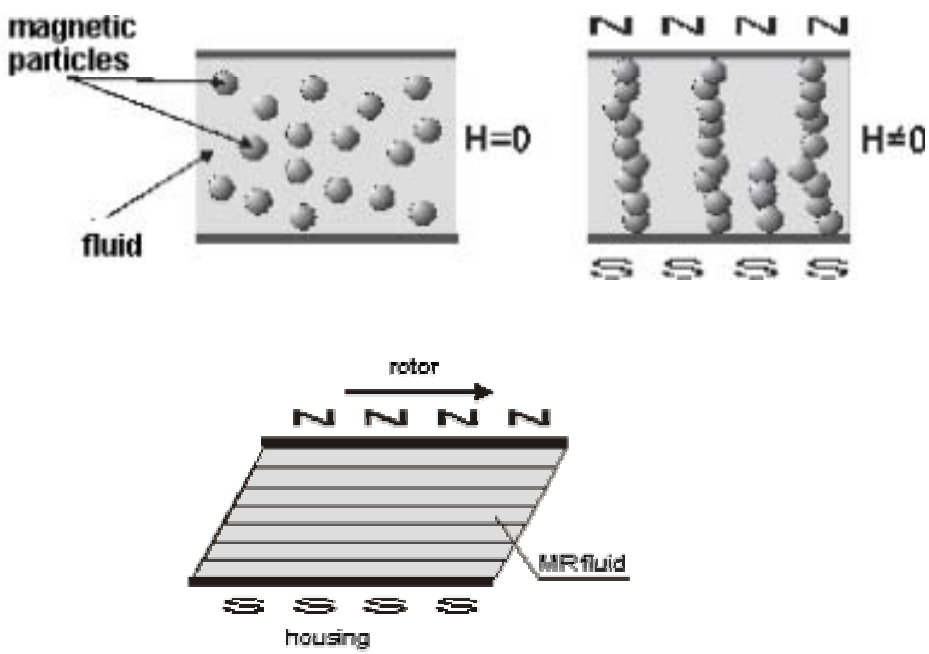

Figure 2.4.2: Direct-sheer mode of MR fluid [17].

Current in the coil creates magnetic field in the gap. Coil is supplied with 12 VDC. Value of the current can be set from 0 to 1 A. Magnetic field strength and following it fluid viscosity depends

on the current in the coil. Viscosity of the fluid influence torque that breaks the rotor. When the current in the coil is equal to zero there is no magnetic field and brake has torque equal to minimum M_{min}. M_{min} is equal to the torque caused by bearings, seal and viscosity of carrier liquid. When current I = 1 A then H $\neq 0$ and brake has highest possible value of the torque M_{max}, that is limited only by maximum current in the coil I_{max} and construction of the brake.

The LORD Corporation Tactile Feedback Device is a cost-effective and design-efficient feedback solution for improving by-wire control and safety. Unlike electric-motor feedback devices, which can transmit unwanted and potentially hazardous forces to the operator, the LORD Tactile Feedback Device produces a continuously variable resistive steering torque, delivering high-fidelity "feel" and maximum control to the operator. Available in standard 12 Nm and 5 Nm torque configurations, these devices are ready for immediate integration and evaluation in your by-wire project. In our research we use 5 Nm torque device [21].

Figure 2.4.3 5 Nm Tactile force feedback device from lord [21].

Tactile force feedback device:	
Supply voltage	24 VDC
Coil Resistance @ 20C	21 Ohm nominal
Max Current	1.5 A
Torque @ 1.0 A	5 Nm nominal
Torque @0.0 A	<0.4 Nm
Operating Speed	120 RPM
Sensor:	
Optical Encoder Resolution	256 PPR
O/P Signal	2 independent quadrature pairs; 5 V pulses drain high and low
Supply Voltage	5 VDC +/- 0.25 V

Specification and Typical torque rang

2.5 Force Sensor

Figure 2.5.1 Force Sensor [13].

In this research force acting on rod is founded when it pushes the spring. The force sensor should be of capable enough to measure that force precisely. For this application we select Flexiforce sensor. The FlexiForce sensor is an ultra-thin and flexible printed circuit. As shown in figure 2.5.1 it has 3 pins, the two outer pins of the connector are active and the center pin is

inactive. The sensor acts as a variable resistor in an electrical circuit. When the sensor is unloaded, its resistance is very high (greater than 5 Meg-ohm); when a force is applied to the sensor, the resistance decreases. Connecting an ohmmeter to the outer two pins of the sensor connector and applying a force to the sensing area can read the change in resistance. In our research we have use 25 lbf sensor. In the image below, the plot shows both the Force vs. resistance and Force vs. conductance (1/R). Note that the conductance curve is linear, and therefore useful in calibration [13].

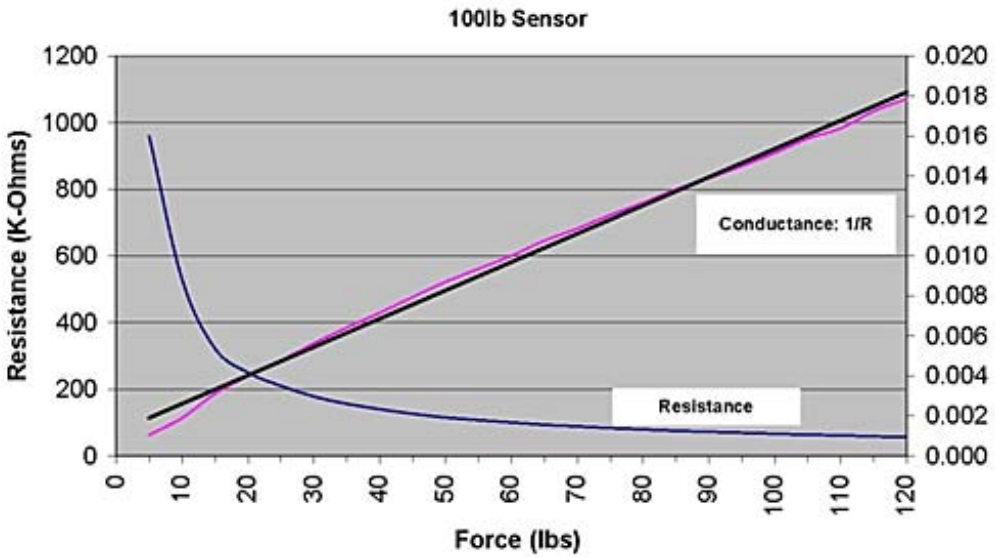

Figure 2.5.2 Force vs. conductance (1/R) [13].

CHAPTER 3

CONTROL CIRCUIT DESIGN AND PROGRAMING

3.1 Stepper motor selection and Control

Stepper Motor: A stepper motor is an electromechanical device which converts electrical pulses into discrete mechanical movements. The shaft or spindle of a stepper motor rotates in discrete step increments when electrical command pulses are applied to it in the proper sequence. The motors rotation has several direct relationships to these applied input pulses. The sequence of the applied pulses is directly related to the direction of motor shafts rotation. The speed of the motor shafts rotation is directly related to the frequency of the input pulses and the length of rotation is directly related to the number of input pulses applied [24].

Stepper Motor Advantages and Disadvantages:

Advantages:

- The rotation angle of the motor is proportional to the input pulse.
- The motor has full torque at standstill (if the windings are energized)
- Precise positioning and repeatability of movement since good stepper motors have an accuracy of 5% of a step and this error is non cumulative from one step to the next.
- Excellent response to starting/ stopping/reversing.
- Very reliable since there are no contact brushes in the motor. Therefore the life of the motor is simply dependant on the life of the bearing.
- The motors response to digital input pulses provides open-loop control, making the motor simpler and less costly to control.

- It is possible to achieve very low speed synchronous rotation with a load that is directly coupled to the shaft.
- A wide range of rotational speeds can be realized as the speed is proportional to the frequency of the input pulses.

Disadvantages:

- Resonances can occur if not properly controlled.
- Not easy to operate at extremely high speeds [25].

Permanent magnet stepper motors: The most common type of stepper motor you'll run across is the permanent magnet (PM) stepper. As you might suspect from the name, PM steppers have a permanent magnet in them in the form of a rotor magnetized in alternate polarity "stripes" parallel to the rotor shaft [26].

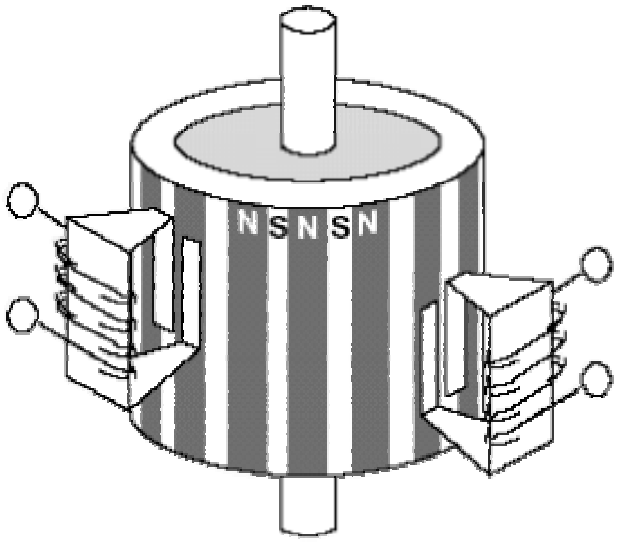

3.1.1 Permanent magnet stepper motor layout [26].

The step size (angular resolution) of a given motor is entirely a function of the angular "width" of these magnetized stripes -- 30 degrees is common, although steps down to 7.5 degrees are not unheard of in even very inexpensive motors.

Bipolar stepper motor

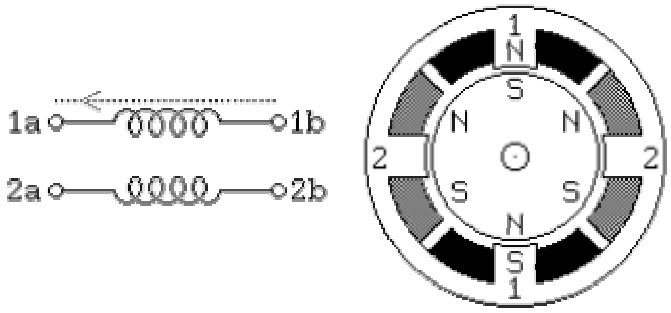

3.1.2 Bipolar stepper motor layout [26].

Bipolar stepper motors generally have four leads, in two pairs, each pair powering one coil. These motors are common and cheap, these motors are used to drives a floppy drive read / write head is a bipolar stepper motor. To rotate the motor, we simply supply the two coils with phase-shifted pulse trains.

Unipolar stepper motor

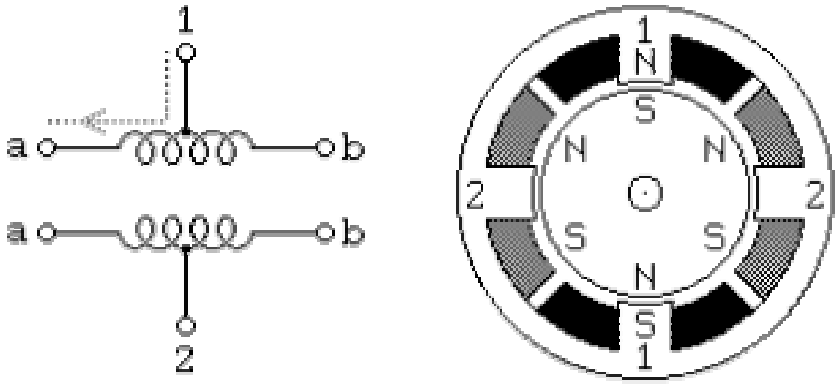

3.1.3 Unipolar stepper motor layout [26].

Unipolar stepping motors, both Permanent magnet and hybrid stepping motors with 5 or 6 wires are usually wired as shown in the schematic in Figure , with a center tap on each of two windings. In use, the center taps of the windings are typically wired to the positive supply, and the two ends of each winding are alternately grounded to reverse the direction of the field

provided by that winding. The motor cross section shown in Figure is of a 30 degree per step permanent magnet or hybrid motor -- the difference between these two motor types is not relevant at this level of abstraction. Motor winding number 1 is distributed between the top and bottom stator pole, while motor winding number 2 is distributed between the left and right motor poles. The rotor is a permanent magnet with 6 poles, 3 south and 3 north, arranged around its circumference.

For higher angular resolutions, the rotor must have proportionally more poles. The 30 degree per step motor in the figure is one of the most common permanent magnet motor designs, although 15 and 7.5 degree per step motors are widely available. Permanent magnet motors with resolutions as good as 1.8 degrees per step are made, and hybrid motors are routinely built with 3.6 and 1.8 degrees per step, with resolutions as fine as 0.72 degrees per step available. . For our experimental setup SLO-SYN M093-FF-401 Bipolar Stepper motor is used.

3.1.4 SLO-SYN M093-FF-401 Bipolar Stepper motor [31].

Stepper Motor Control: Two control sequences for single stepping a unipolar or bipolar stepper motor are shown below (here positive voltages are denoted by red bars, and negative / ground by blue):

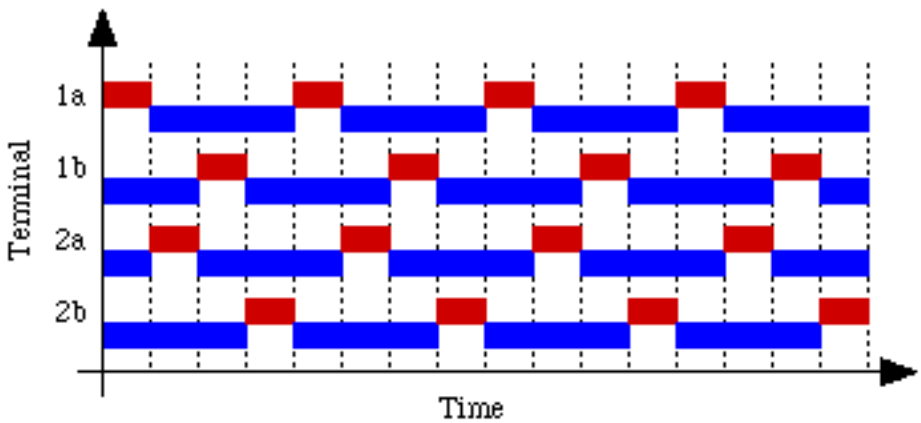

This first sequence only powers one winding at a time, so it provides lower torque at lower input power.

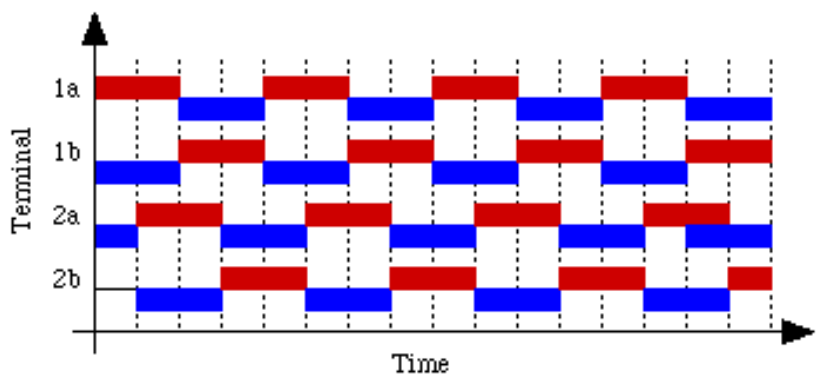

The second sequence powers two windings at a time and produces a torque about 40% greater than for the previous sequence while using twice as much power

In our experiment the objective is as the operator feed the rod at station A , stepper motor at station B must be rotate in same angle. The angle and direction of Rotation at station A can be known by encoder pulses. The Quadrature Encoder is inbuilt with the MR fluid Tactile force Feedback device. This encoder uses two output channels (A and B as shown in figure) to sense

position. Using two code tracks with sectors positioned 90 degrees out of phase; the two output channels of the quadrature encoder indicate both position and direction of rotation. If A leads B, for example, the disk is rotating in a clockwise direction. If B leads A, then the disk is rotating in a counter-clockwise direction. By monitoring both the number of pulses and the relative phase of signals A and B, you can track both the position and direction of rotation.

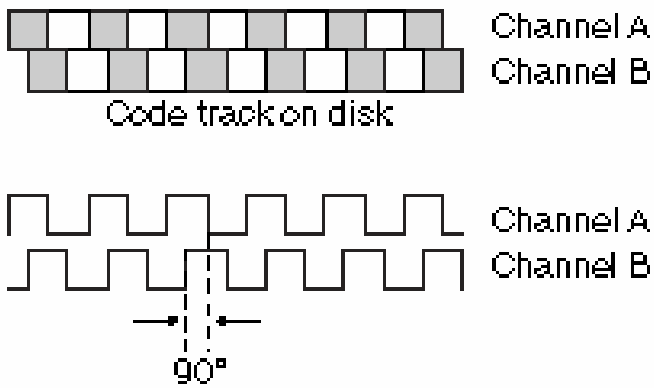

3.1.5 Quadrature Encoder pulses A and B [26].

Using this channel A and Channel B of quadrature output encoder (the word "quadrature" simply refers to a 90° angular separation). A phase detection circuit may be made from a D-type flip-flop, to distinguish a clockwise pulse sequence from a counter-clockwise pulse sequence from which we can decide the direction of rotation of rollers. As shown in figure When the encoder rotates clockwise, the "D" input signal square-wave will lead the "C" input square-wave, meaning that the "D" input will already be "high" when the "C" transitions from "low" to "high," thus setting the D-type flip-flop (making the Q output "high") with every clock pulse. A "high" Q output can be use by stepper motor control to rotate stepper motor clock wise, and any clock pulses received by the clock from the encoder (from either LED) will increment it. Conversely, when the encoder reverses rotation, the "D" input will lag behind the "C" input waveform, meaning that it will be "low" when the "C" waveform transitions from "low" to "high," forcing

the D-type flip-flop into the *reset* state (making the Q output "low") with every clock pulse. A "Low" Q output can be use by stepper motor control to rotate stepper motor counter clock wise.

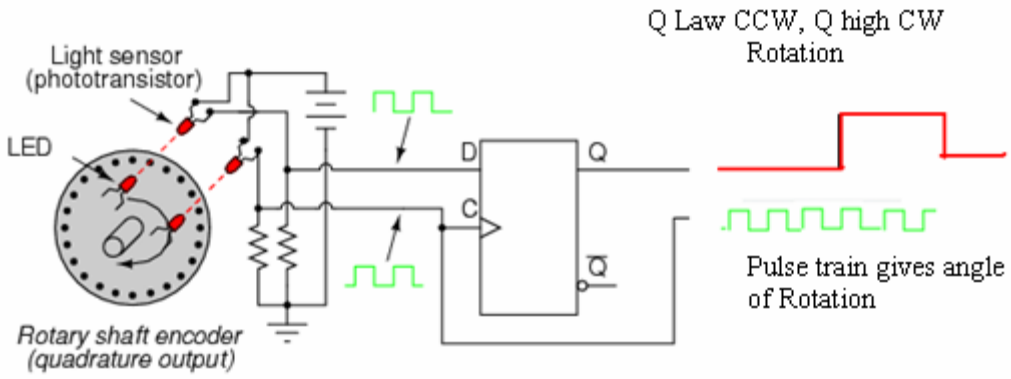

3.1.6 D Flip flop circuit to detect Rotation Direction of Encoder. [24]

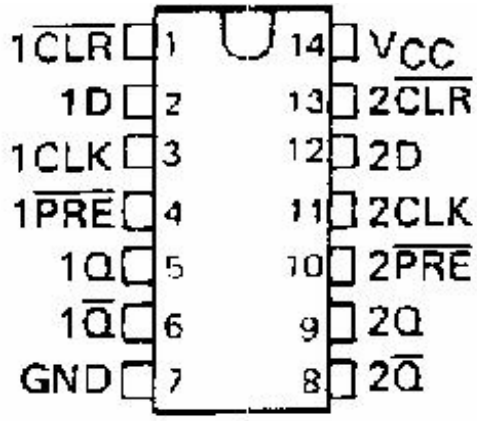

3.1.7 IC 7474 Dual D flip flop [24]

To control the stepper motor API P51Series Stepper motor controller is used. As shone in figure it has 3 type of port. Prot 1 is motor port where the motor connections are made. As we use bipolar motor this motor has 4 phase a+ , a-, b+ and b- which goes to A+ , A- , B+ and B- of API controller. Port 2 is Logic port where we can give steps, direction of rotation, run or reset and full/half step mode. Pin 1 goes to ground; pin 2 is directly connected to channel B of

Encoder, pin 3 Cw/Ccw is connected with the Q pin of D flip-flop, pin 4,5,6 ,7 goes to +5 Volt.

Port 3 is power port were we can give 115VAC.

1	A+	Motor
2	A-	
3	B+	
4	B-	
5	Ground	
6	A Common	
7	B Common	

1	Ground	Logic
2	Step	
3	Cw/Ccw	
4	HI/Low PWR	
5	ENA/NO PWR	
6	A Common	
7	B Common	

1	Line	Power
2	Neut	
3	Ground	

3.1.8 Port Connection of API P51 Stepper Motor Controller

3.1.9 API P51 Stepper Motor Controller [31]

3.2 Force sensor circuit

We are using FlexiForce force to sense the force acting on rod. There are many ways to integrate the FlexiForce sensor into an application. One way is to incorporate it into a force-to-voltage circuit. A means of calibration must then be established to convert the output into the appropriate engineering units. Depending on the setup, an adjustment could then be done to increase or decrease the sensitivity of the sensor. In our case a -12 V DC excitation voltage drives it. This circuit uses an inverting operational amplifier arrangement to produce an analog output based on the sensor resistance and a fixed reference resistance. An analog-to-digital converter can be used to change this voltage to a digital output. In this circuit, the sensitivity of the sensor could be adjusted by changing the reference resistance (RF); a lower reference resistance will make the sensor less sensitive, and increase its active force range.

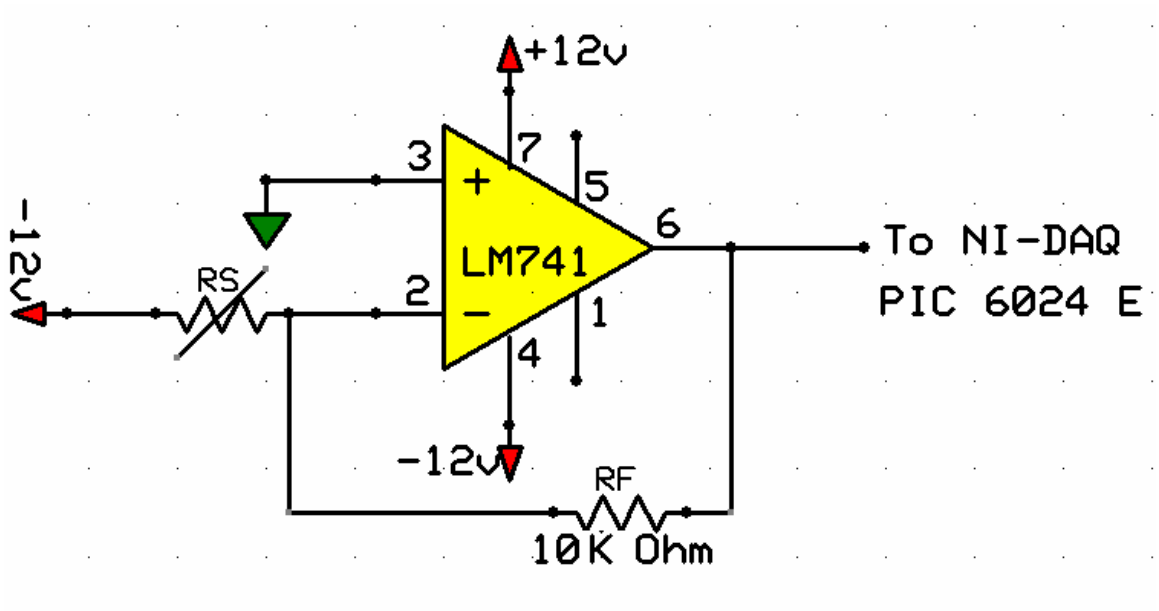

3.2.1 Drive circuit for Flxiforce Sensor

Output form this circuit is use as input to the Labview program for other operation as we will discuss letter on. So one of out objective is output of this circuit is 0V at no load and +5 V at full

22.5 lb load as we can only apply maximum +5 V at input to Labview. This can be done by selecting the proper value resistor RF. As the value of RS get change due to change in load, output voltage of circuit get change. So we are getting 0-5 V form this circuit. Calibration results of this circuit are in next chapter.

3.3 Control of MR fluid force feedback device

Magnetorheological (MR) fluids are materials that respond to an applied magnetic field with a change in rheological behavior. The magnetic field can be control in many different ways. In our experiment Pulse Width Modulation method is used to control the magnetic field of MR fluid force feedback device. Pulse width modulation (PWM) is a powerful technique for controlling analog circuits with a processor's digital outputs. PWM is employed in a wide variety of applications, ranging from measurement and communications to power control and conversion. By controlling analog circuits digitally, system costs and power consumption can be drastically reduced. What's more, many microcontrollers and DSPs already include on-chip PWM controllers, making implementation easy.

In a nutshell, PWM is a way of digitally encoding analog signal levels. Through the use of high-resolution counters, the *duty cycle* of a square wave is modulated to encode a specific analog signal level. The PWM signal is still digital because, at any given instant of time, the full DC supply is either fully on or fully off. The voltage or current source is supplied to the analog load by means of a repeating series of on and off pulses. The *on-time* is the time during which the DC supply is applied to the load, and the *off-time* is the periods during which that supply is switched off. Given a sufficient bandwidth, any analog value can be encoded with PWM.

Figure shows three different PWM signals. Figure shows a PWM output at a 10% duty cycle. That is, the signal is on for 10% of the period and off the other 90%. Figures b and c show

PWM outputs at 50% and 90% duty cycles, respectively. These three PWM outputs encode three different analog signal values, at 10%, 50%, and 90% of the full strength. If, for example, the supply is 9V and the duty cycle is 10%, a 0.9V analog signal results.

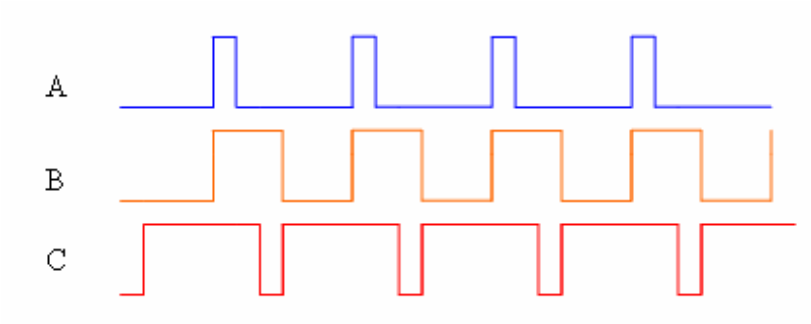

3.2.2 PWM with 10%, 50% and 90% duty cycle

So to control the MR fluid force feedback device PWM is used. As the signal form force sensor is varying form 0-5 volt, PWM duty cycle should be vary in same amount to simulate the same force. For example at 0 lb force output of force sensor is 0 V and duty cycle of PWM is 0%. Similarly at 25 lb force output of force sensor is 5 V and duty cycle of PWM controlling MR fluid tactile force feedback device is 100%.

So some control circuit is required, input of this circuit is 0-5 V from force sensor and output is PWM with 0 -100% duty cycle. We can use Labview for this kind for control applications. Labview will be discussed shortly. Output form Labview is 5 volt signal so it has to be converted in to driving voltage which is 24 V in this case. For this application Darlington Pair circuit is used. This is two transistors connected together so that the current amplified by the first is amplified further by the second transistor. The overall current gain is equal to the two individual gains multiplied together.

The TIP 120 series transistors are Darlington Pairs i.e. they have 2 transistors in the one package, which gives them the advantage of higher power and ling and gain. Voltage

between Collector and Emitter 6 - 60 Volts max. Power handling capacity 60 Watts max. Current handling capacity 5 Amps max. Amplification (gain) greater than 1000. TIP can be use as current amplifiers, audio amplifiers and electronic switches, for example, Motor Drive Amplifiers, Relay Drive Amplifiers.

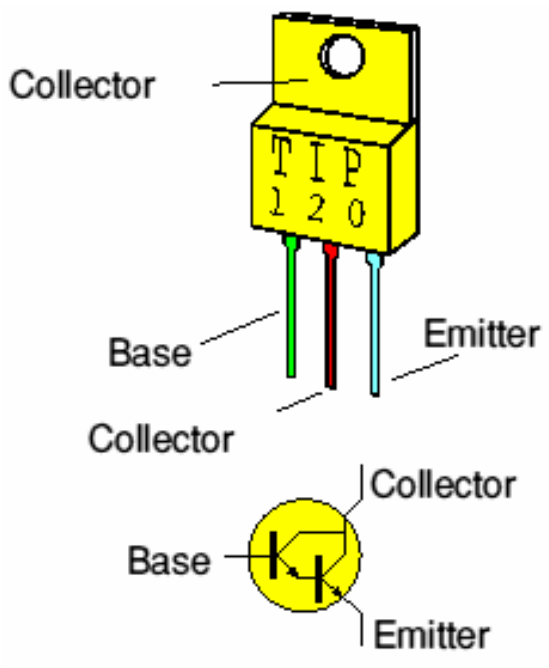

3.2.3 TIP 120 [32].

To drive the MR fluid tactile force feedback device with PWM control signal and 24V, the Collector is connected to the positive (+24ve) supply via the load. NB If the load is inductive i.e. has coil windings such as a relay, solenoid or motor, then it is usual to connect a diode across it to prevent the Back EMF from damaging the transistor. (Cathode to supply). The input is connected to the Base via a limiting resistor (typically 1K). The Emitter is connected to the negative (-ve) supply (0V).

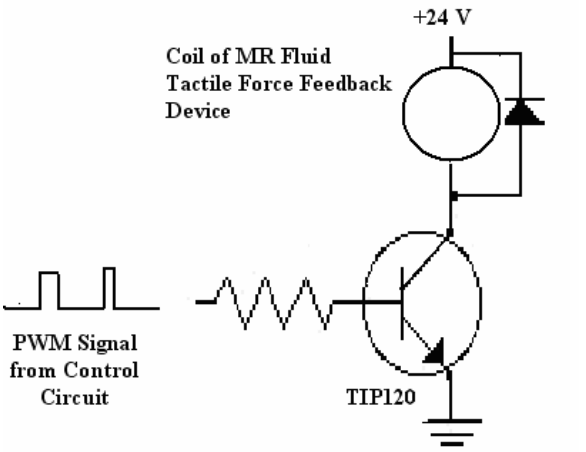

3.2.4 Driving Circuit for MR fluid tactile force feedback

PWM Generation: PWM can be generated in much different methods; in our case we required very precise control of duty cycle. In our experiment we use PAK Vb is a Pulse Width Modulation (PWM) coprocessor I/C. The PAK-V offers 8 simultaneous PWM outputs with no overhead from the host computer. Simply by sending commands via ordinary RS232 protocol and the PAK-V generates PWM until cond tell it to stop. We can select 9600 or 2400 baud and use true or inverted serial logic. The PAK Vb can generate 8 channels of PWM at one time using one of two methods, proportional PWM and equal area PWM.

Here are some of the PAK Vb's major features:

- Serial interface uses TTL level RS232 at 9600 or 2400 baud (true or inverted)
- Uses as few as 1 pin to connect to the host
- Can connect multiple devices to the same pin with one additional pin per device
- Asynchronous operation - all 8 channels active at one time with no overhead on host

The PAK Vb is a standard 28-pin IC. In order to operate it must have a regulated supply of 5V and connection to a clock element. The Stamp PAK Vb includes a 50MHz ceramic resonator that you can use to clock the chip. Other than the power and clock connections, the

PAK Vb requires at least one wire to connect between microcontroller or PC (the host) and itself. Depending on the host's capabilities and your application, you may want to use a few additional pins to control the PAK. PWM is useful for motor control, or for generating voltages usingan RC network. With the PAK-Vb you can generate continuous PWM with no intervention from the host processor, making PWM easy and useful.

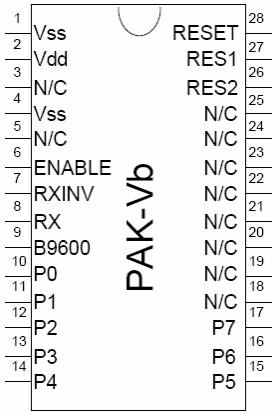

3.2.5 PAK Vb [33].

Supply 5V to Vdd and ground the Vss pins. Connect the two outer pins of the ceramic resonator to the RES1 and RES2 pins (the order does not matter). Ground the center pin of the resonator. Connect the RESET pin to 5V. For the simplest mode of operation leave ENABLE open and jumper B9600 and RXINV for the operating mode you desire. Connect the RX pin to the host microprocessor or PC.

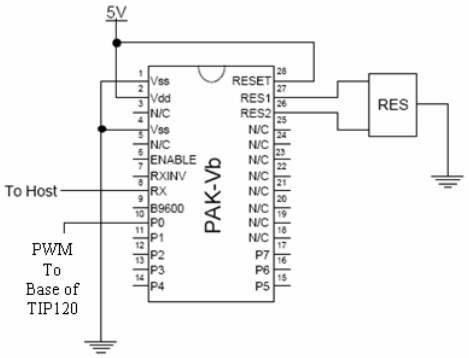

3.2.6 Circuit Connection of PAK- VB [33].

Out put from PAK Vb is given to the base of Tip120 with driving resistors which plays major role in current control. This will be discussed letter in this chapter. In our experiment we use Labview to program PAK- Vb. Software command and Pin configuration of PAK Vb is given in Appendices. We can see 50% and 90% duty cycle output form P0 pin using oscilloscope.

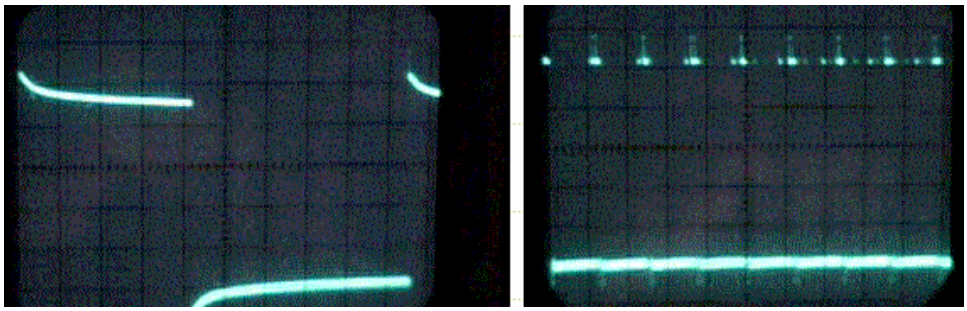

3.2.7 50% and 90% duty cycle output form P0 pin of PAK-VB

3.4 LabVIEW

LabVIEW is a program development application, much like C or FORTRAN. LabVIEW is, however, different from those applications in one important respect. Other programming systems use text-based languages to create lines of code, while LabVIEW uses a graphical programming language, G, to create programs in block diagram form. LabVIEW, like C or FORTRAN, is a general-purpose programming system with extensive libraries of functions for many programming tasks. LabVIEW includes libraries for data acquisition, data analysis, data presentation, and data storage. A LabVIEW program is called a virtual instrument (VI) because it's appearance and operation can imitate an actual instrument.

In our experiment to program PAK Vb LabVIEW is used. Input to the LabVIEW program is 0- 5 V signal form force sensor and output is Hex code required to program PAK Vb.

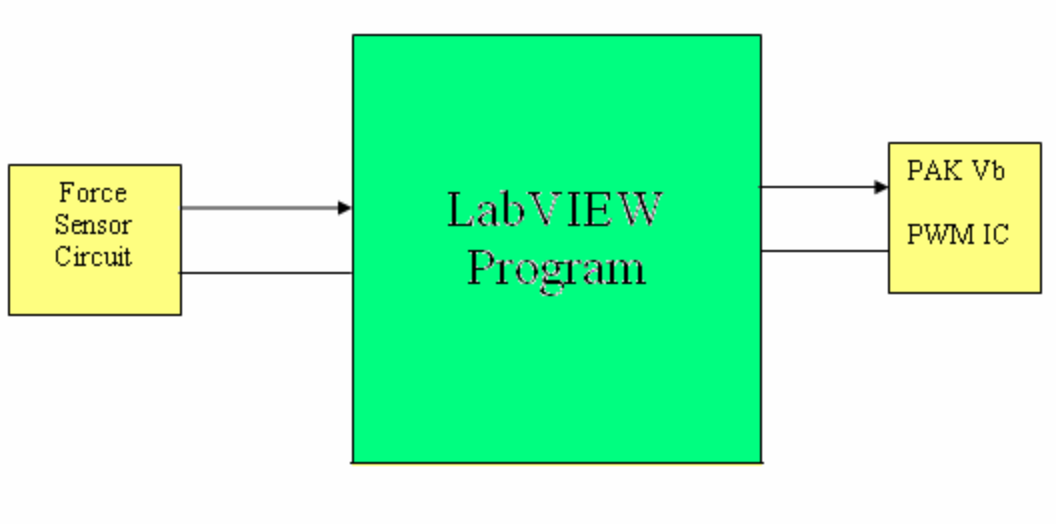

3.3.1 LabVIEW

As a LabVIEW program is called a virtual instrument (VI) some kind of hardware required to connect it with physical word. For this application Data Acquisition System is required._Data acquisition is the process of gathering information in an automated fashion from analog and digital measurement sources such as sensors and devices under test. Data acquisition uses a combination of PC-based measurement hardware and software to provide a flexible, user-defined measurement system. Data acquisition involves gathering signals from measurement sources and digitizing the signal for storage, analysis, and presentation on a personal computer (PC).

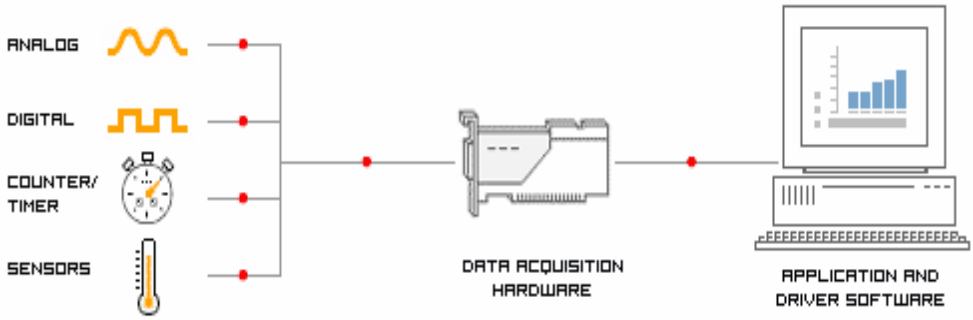

3.3.2 DAQ System [34].

PIC 6024A DAQ system is used with LabVIEW in our setup. The 6024E features 16 channels of analog input, two channels of analog output, a 68-pin connector block and eight lines of digital I/O. This device uses the National Instruments DAQ-STC system-timing controller for time-related functions. The DAQ-STC consists of three timing groups that control analog input, analog output, and general-purpose Counter/timer functions. These groups include a total of seven 24-bit and three 16-bit counters and a maximum timing resolution of 50 ns. The DAQ-STC makes possible such applications as buffered pulse generation, equivalent time sampling, and seamless changing of the sampling rate.

3.3.3 6024E DAQ board [34].

DAQ board is connected to external word by connector block as shown in figure.

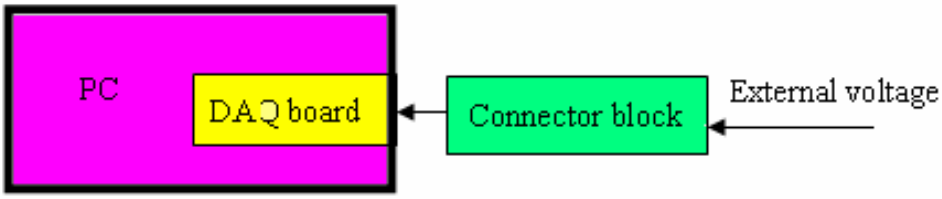

3.3.4 Connector block

3.3.5 CB-68LP connector block [34].

External voltage signal to the connector block should be always check using an oscilloscope to verify that external voltage signal is well-behaved and has amplitude of not more than 5 volts. Since the DAQ board is rated for voltages between –5V and 5V, application of a voltage outside that range could cause irreparable damage to the (expensive) DAQ circuitry. More Information on 6024E DAQ board is in Appendices.

LabVIEW Program: This program takes analog input from force Sensor and gives the appropriate Hex code at output through serial port.

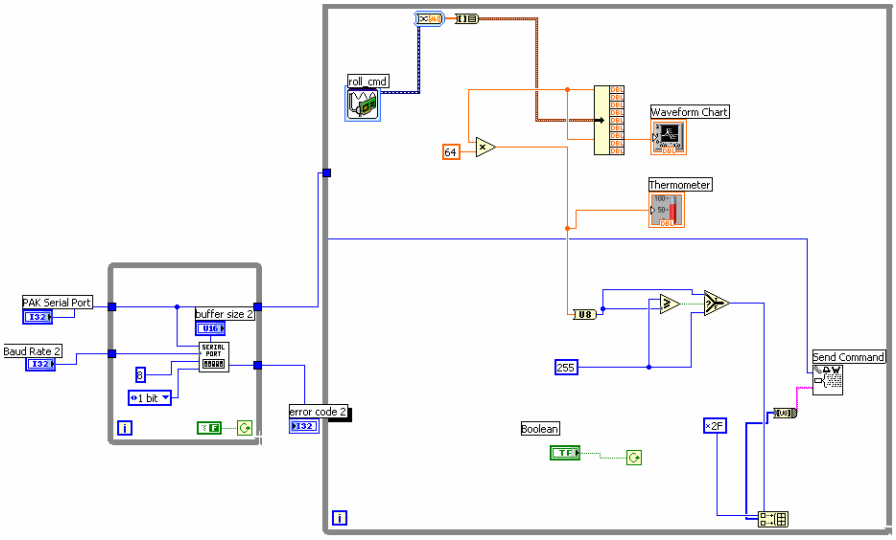

3.3.6 LabVIEW Block Diagram

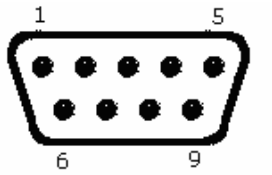

3.3.7 Serial Port:
1. Data Carrier Detect, 2. Receive Data (RxD), 3. Transmit Data (TxD), 4.Data Terminal Ready (DTR), 5. Gnd, 6. Data Set Ready, 7. Request To Send,
8. Clear To Send, 9. Ring Indicator

Serial ports also known as RS-232 ports, a COM port is an interface to connect serial devices. The RS-232-C standard specifies that the voltage on the wire for sending a logical 0 are from +5v to +15v. The voltage for sending a 1 are from -5v to -15v. Most microcontrollers not capable of generating these voltages. So, to connect a microcontroller to a true RS-232 device, it's needed to convert the TTL voltages of 0 and +5 into voltages between about -10 volts and +10 volts. MAX232 is the chip which convert the RS232 signal in to TTL signal. It runs on a single chip supply (+5 volts), and requires a few external capacitors. Here is a diagram of the internals of the MAX232A. It shows a double charge pump voltage doubler and a +10v to -10v voltage inverter. The voltages output are used to generate the RS-232 compliant signals. More information on MAX232 is in Appendices [35].

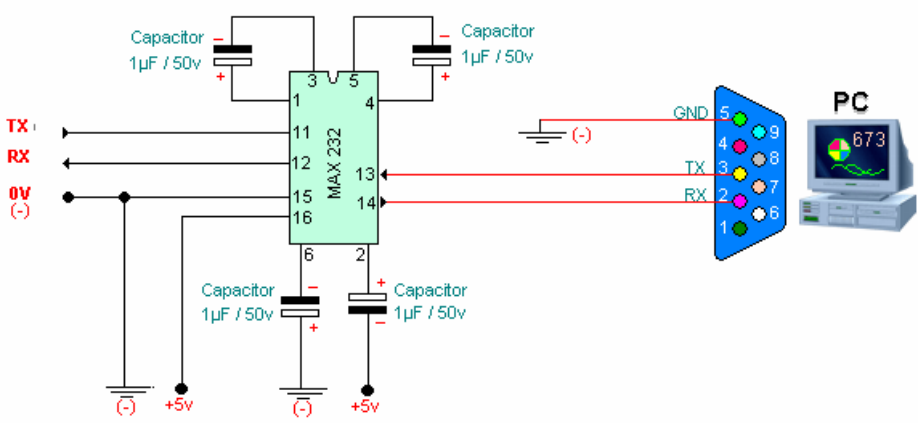

3.3.8 RS232 to TTL (MAX232) [35].

CHAPTER 4

EXPRIMENT AND RESULT

4.1 Force Sensor Calibration

Calibration is the technique by which the sensors electrical output is associated to a real engineering unit like pounds. Calibration can be done by applying a known force to the sensor and correlating the sensor output to this force. This step is repeated with a number of known forces that approximate the load range to be used in experiment. A linear interpolation can then be done between zero load and the known calibration loads, to decide the real force range that matches the sensor output range. In out case the MR fluid force feedback device can produce maximum 22.5 lb load. Also Maximum voltage that can be ready by DAQ card is 5 V. So we should set the RF value such a way that we get 5 V at 22.5 lb load. Figure 4.1.1 shows the method of applying known load on sensor by putting known mass on the calibration instrument.

Fig. 4.1.1 FlexiForce Calibration Device

To calibrate the sensor we apply known forces and messure the output Voltage. To minimise the error we perform each expriment with 3 times. We use stat-Ease software to generate randam expriment set. We get follwing matrix which also shows output result. To validate the experimental results its necessary to conduct statistical analysis to draw miningful

conclusion. Statostocal analysis helps in removing experimental errors obtaind form the data, provide validity to the experimental result and attach a level of confidence to the results. This gives the experimenter the cofidence that the experimental methods , result and conclusions are sound and valid. The statical analysis is conducted using State-Ease. The factor considered is force on sensor and response is voltage output from sensor circuit.

		Factor 1	Response 1	
Std	Run	Block	A: Force	Voltage
			lbf	V
1	9	Block 1	0	0
2	7	Block 1	0	0
3	18	Block 1	0	0
4	13	Block 1	5	0.9
5	8	Block 1	5	1.2
6	10	Block 1	5	1.3
7	4	Block 1	10	2.3
8	14	Block 1	10	1.9
9	2	Block 1	10	2.4
10	11	Block 1	15	3.4
11	17	Block 1	15	3
12	1	Block 1	15	3.2
13	16	Block 1	20	4.5
14	15	Block 1	20	4.2
15	3	Block 1	20	4.4
16	6	Block 1	22.5	5.1
17	12	Block 1	22.5	5.2
18	5	Block 1	22.5	4.8

Statical Design Matrix from Stat-Ease software

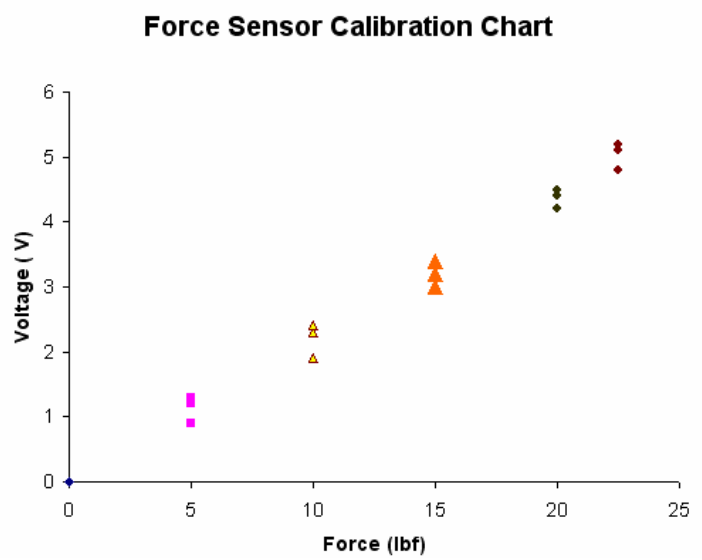

Fig. 4.1.2 A.

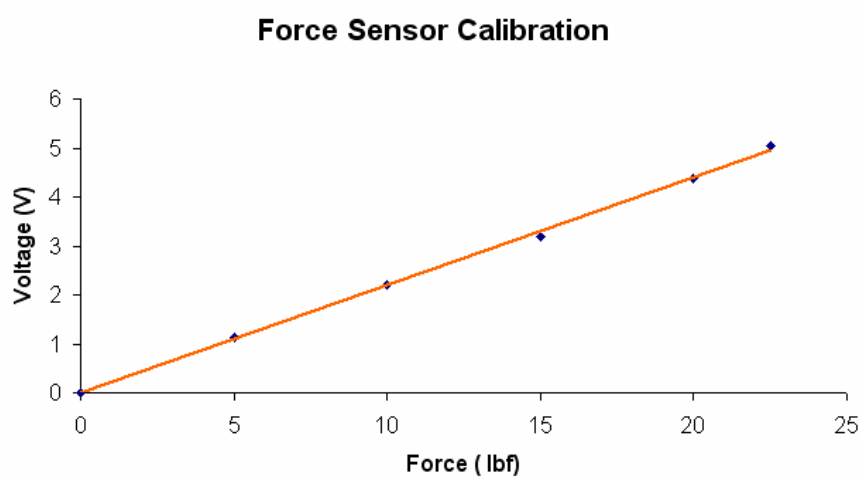

Fig. 4.1.2 B.

Fig. 4.1.2 Force sensor Calibration (Voltage Vs Force)

Once the data has been entered to the statical design matrix, the significance of the factor on the response is analyzed using ANOVA, which is the statical output. From the ANOVA table we can find that the experiment is successful and only 0.01% chance that a “Model F value” this large could occur due to noise.

Response: Voltage

ANOVA for Selected Factorial Model

Analysis of variance table [Partial sum of squares]

Source	Sum of Squares	DF	Mean Square	F Value	Prob > F	
Model	55.36	5	11.07	301.99	< 0.0001	significant
A	*55.36*	*5*	*11.07*	*301.99*	*< 0.0001*	
Pure Error	0.44	12	0.037			
Cor Total	55.8	17				

The Model F-value of 301.99 implies the model is significant. There is only a 0.01% chance that a "Model F-Value" this large could occur due to noise.

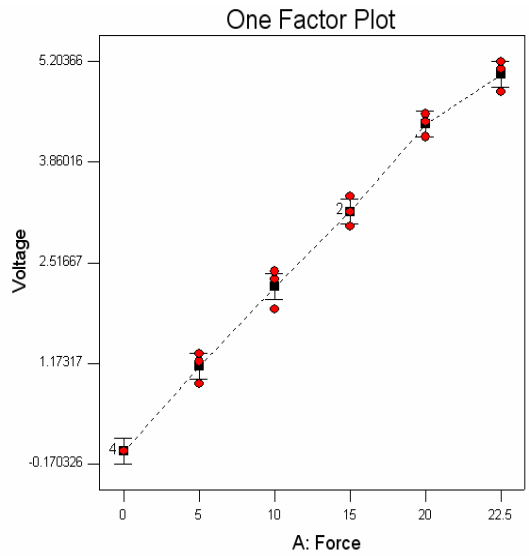

Fig. 4.1.3 A

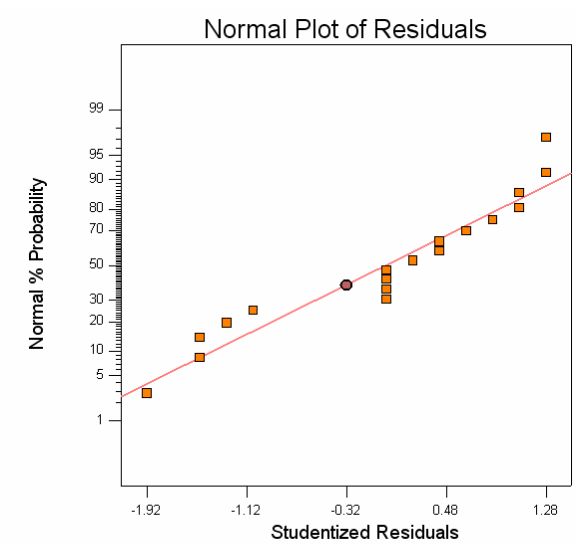

Fig. 4.1.3 B

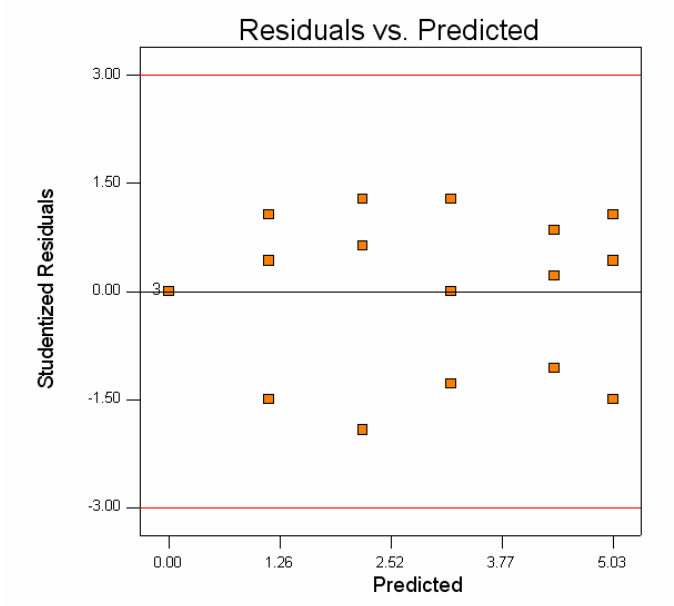

Fig. 4.1.3 C

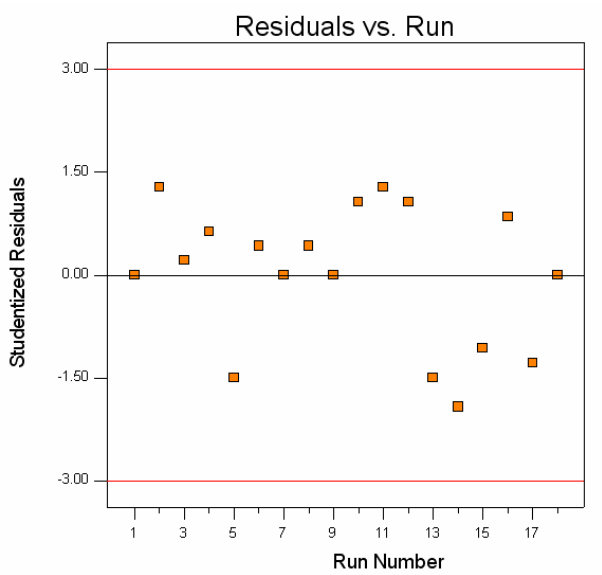

Fig. 4.1.3 D

Fig. 4.1.3 Different Plots form Statistical Analysis

All the plots do not show any violation of model and we can conclude that our model is good for prediction.

4.2 Force Feedback Result

As the final objective of this research is as the operators push the rod at Surgeon station, the rod at Patient station should move same distance. As the road at Patient station pushes the spring the operator at Surgeon station should feel the compression of spring with the same rate so that the operator can feel the virtual force on his had like he him self is physically pushes the road.

To observe better result three different springs at Patient station are used so that the operator can feel different spring rates. Spring specifications are given in following table.

Spring No.	Spring Constant	Free Length
	Lbf/inch	inch
1	19	2
2	13.5	2
3	9.3	2

Spring specification

As the operator pushes the rod following parameters are measured.

1. Displacement of Rod at Surgeon station
2. Voltage output from Force Sensor Circuit
3. Displacement of Rod at Patient station
4. Resisting force generated by MR fluid Force Feedback Device

To measure the resisting force generated by MR fluid Force Feedback Device at Surgeon station, simple procedure is used. As shown in figure known weight are attached to the string connected with rod. As the rod at Patient station compress the spring more and more weight is required to move the rod at Surgeon station. This experiment is repeated for all three springs and values of all five factor discuss above are noted.

Displacement of rod at both station are measured with a simple inch scale, voltage output from force sensor circuit is measured with voltmeter and PWM duty cycle is measured with CRO.

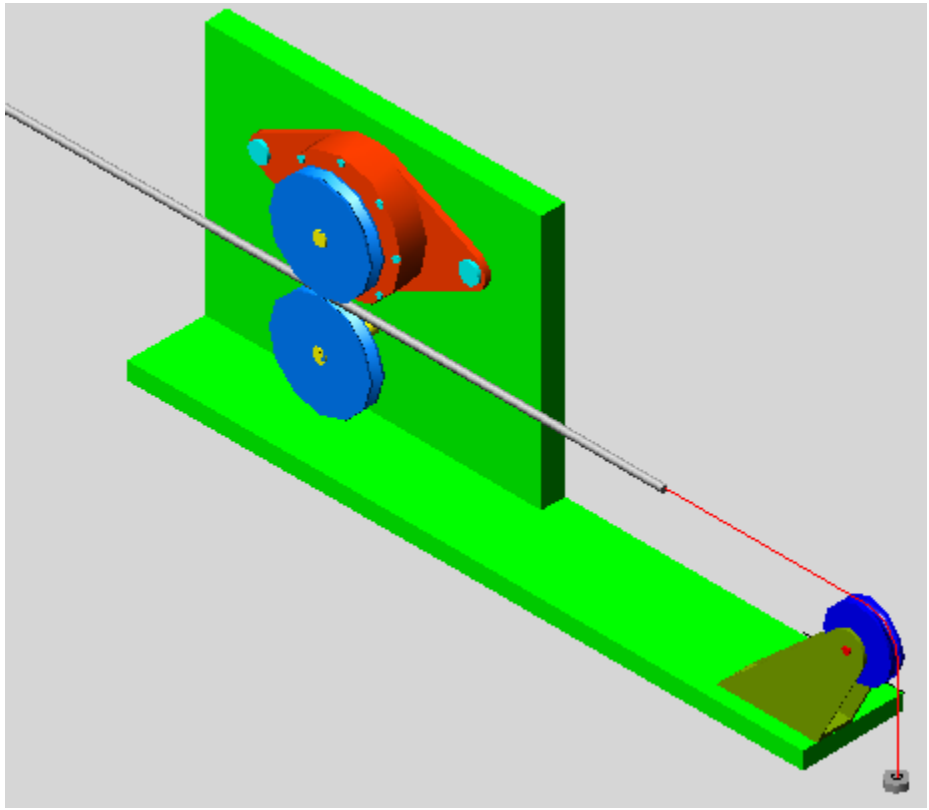

Fig: 4.2.1 Surgeon Station: Measurement of resisting force of MR Fluid force Feedback Device

In following Plots

T: Indicate the theoretical result of force that can be calculated from spring stiffness and displacement.

FS: Indicate the equivalent force from force sensor output voltage.

A: Indicate the actual resisting force generated by MR fluid force feedback device.

Data sheet for Spring 1, 2 and 3

Spring rate Lbf/inch	Compressed length of spring inch	**Theoretical force Lb(T)**	**Actual Force on sensor (FS)**	Displacement of Rod at Patient table inch	**Actual force TFD Lb(A)**
19	0	**0**	**0**	0	**0.9**
19	0.1	**1.9**	**2.25**	0.15	**2.1**
19	0.2	**3.8**	**3.6**	0.2	**3.5**
19	0.3	**5.7**	**5.4**	0.35	**5.5**
19	0.4	**7.6**	**8.1**	0.45	**8.5**
19	0.5	**9.5**	**9**	0.5	**9.2**
Spring rate Lbf/inch	Compressed length of spring inch	**Theoretical force Lb(T)**	**Actual Force on sensor (FS)**	Displacement of Rod at Patient table inch	**Actual force TFD Lb(A)**
13.5	0	**0**	**0**	0	**0.95**
13.5	0.1	**1.35**	**1.8**	0.1	**2**
13.5	0.2	**2.7**	**2.925**	0.2	**3.2**
13.5	0.3	**4.05**	**4.5**	0.35	**4.3**
13.5	0.4	**5.4**	**5.85**	0.5	**5.9**
13.5	0.5	**6.75**	**7.2**	0.6	**7**
13.5	0.6	**8.1**	**8.1**	0.65	**7.9**
13.5	0.7	**9.45**	**9.9**	0.7	**10**
Spring rate Lbf/inch	Compressed length of spring inch	**Theoretical force Lb(T)**	**Actual Force on sensor (FS)**	Displacement of Rod at Patient table inch	**Actual force TFD Lb(A)**
9.3	0	**0**	**0**	0	**0.9**
9.3	0.1	**0.93**	**0.9**	0.1	**1**
9.3	0.2	**1.86**	**1.9**	0.25	**1.6**
9.3	0.3	**2.79**	**2.655**	0.3	**2.7**
9.3	0.4	**3.72**	**3.78**	0.4	**3.7**
9.3	0.5	**4.65**	**4.95**	0.55	**5**
9.3	0.6	**5.58**	**5.85**	0.65	**5.9**
9.3	0.7	**6.51**	**6.3**	0.7	**6.5**
9.3	0.8	**7.44**	**7.2**	0.75	**7.1**
9.3	0.9	**8.37**	**7.9**	0.95	**8**
9.3	1	**9.3**	**9.45**	1.5	**9.5**

Plot 1 shows force characteristics with 19 lbf/inch spring 1 with forward movement. Forward movement mean rod is moving only in forward direction to compress the spring. Theoretical force is perfectly linear with displacement that shows linearly of helical spring. Force sensor output is in voltage which varies form 0 to 5V. For different displacement value gives different voltages, If voltage is multiplied by scale factor 4.4 (22.5 lb/ 5V) the actual force output

from force sensor can be found. By putting different weight, actual resisting force induced by the MR fluid force Feedback device can be calculated. The main point to be observed is that even at zero displacement the actual resisting force is 0.9 lbf which is result of friction between moving part in MR fluid force feedback device and other moving part in system.

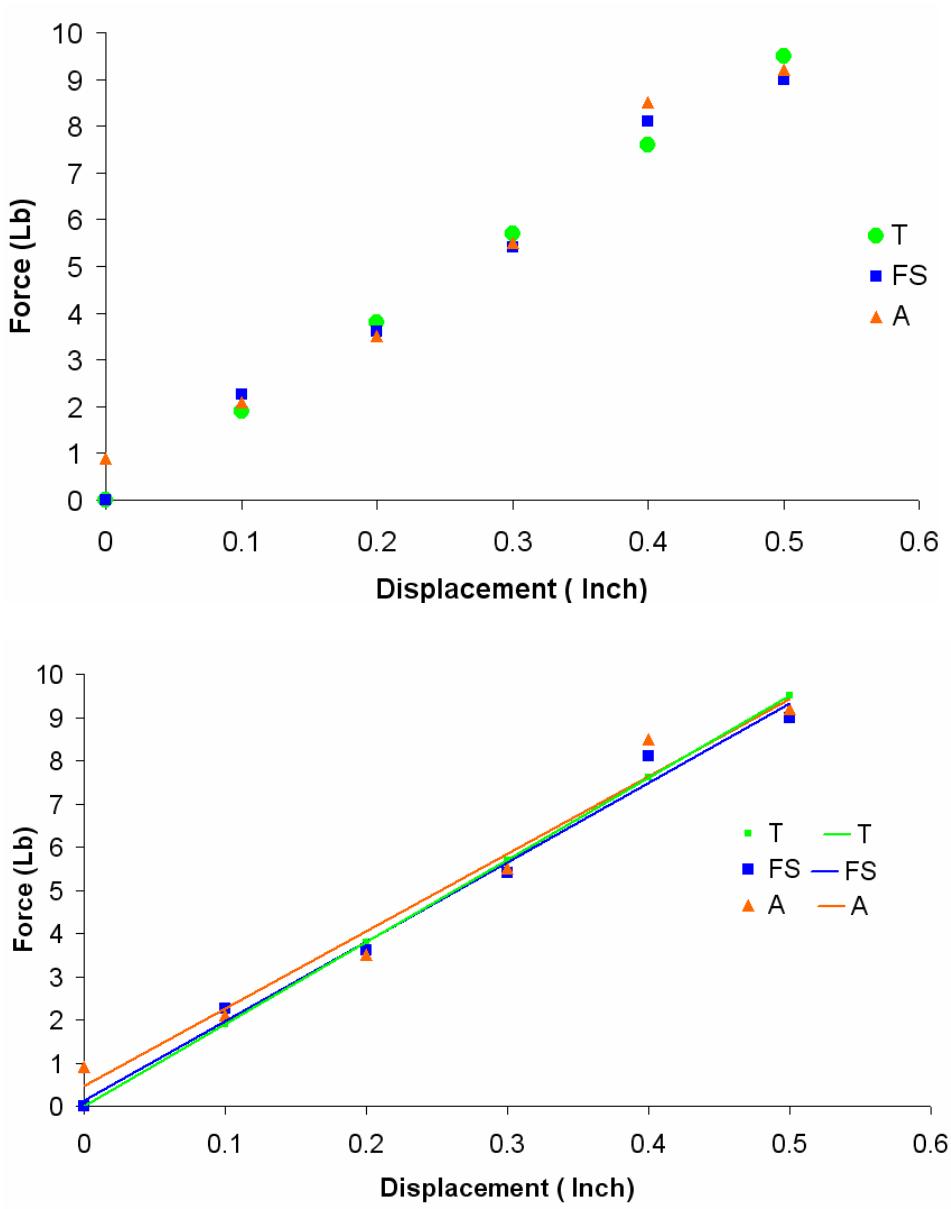

Fig: 4.2.2 Force Vs Displacement (spring1)

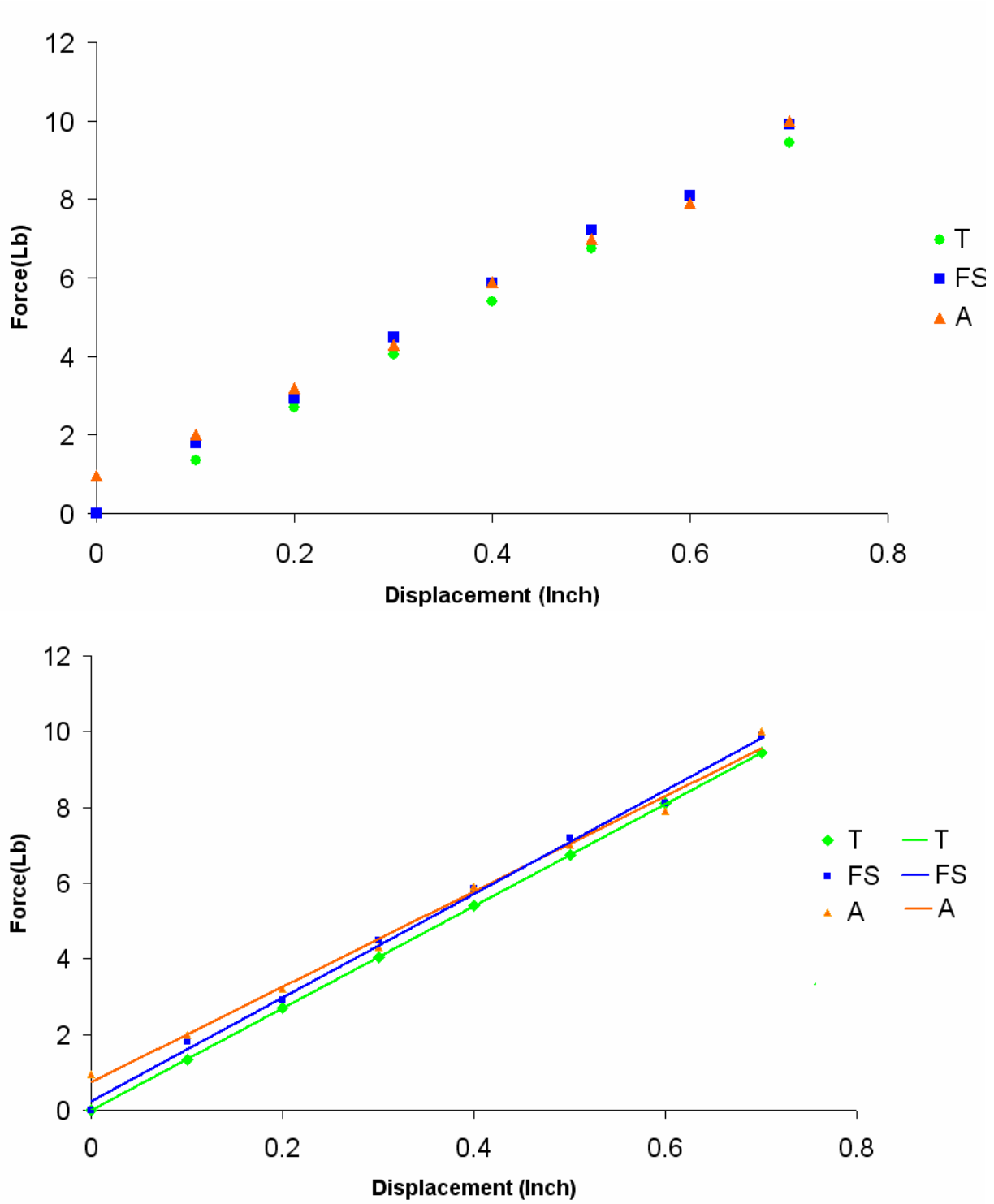

Fig: 4.2.3 Force Vs Displacement (spring 2)

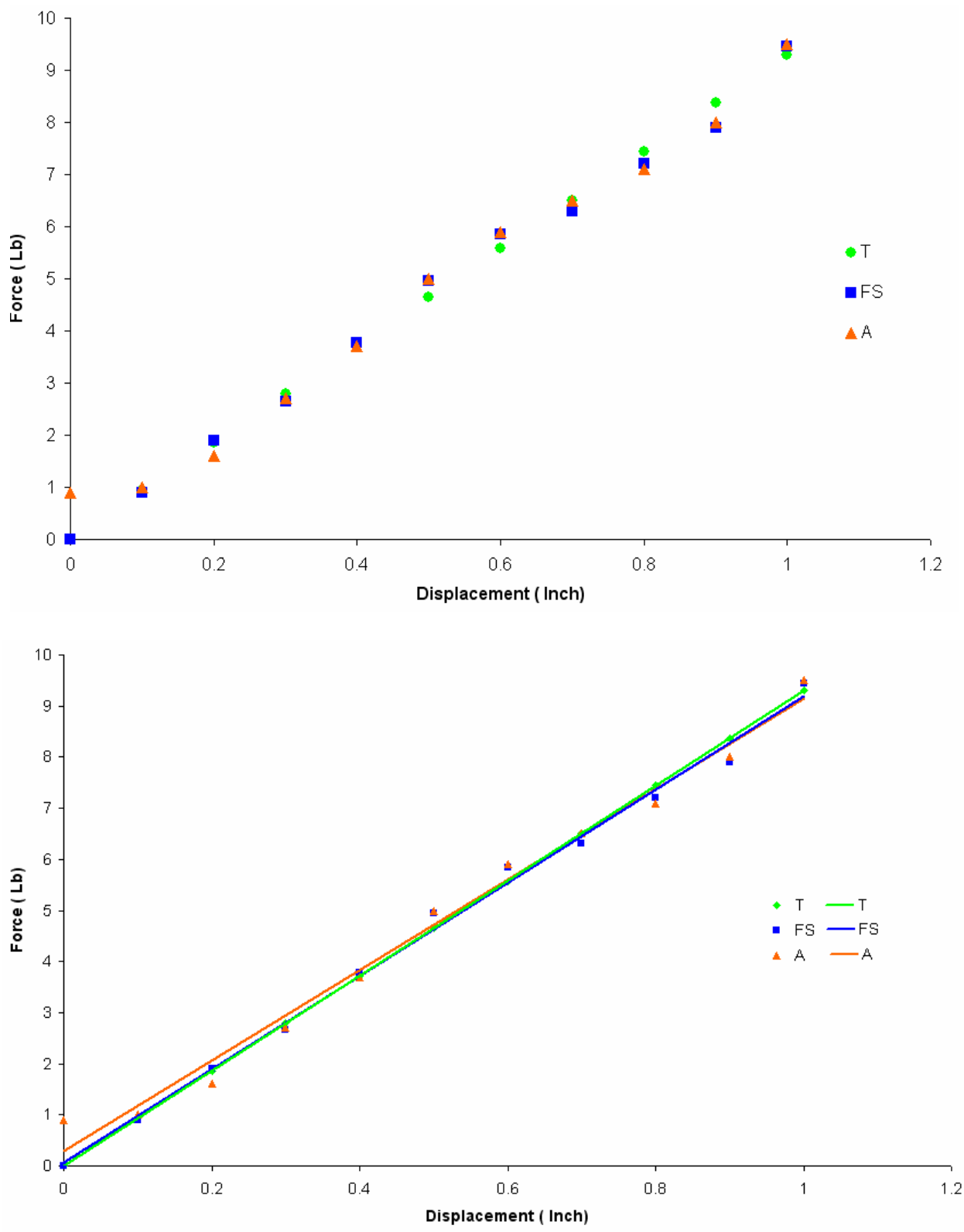

Fig: 4.2.4 Force Vs Displacement (spring3)

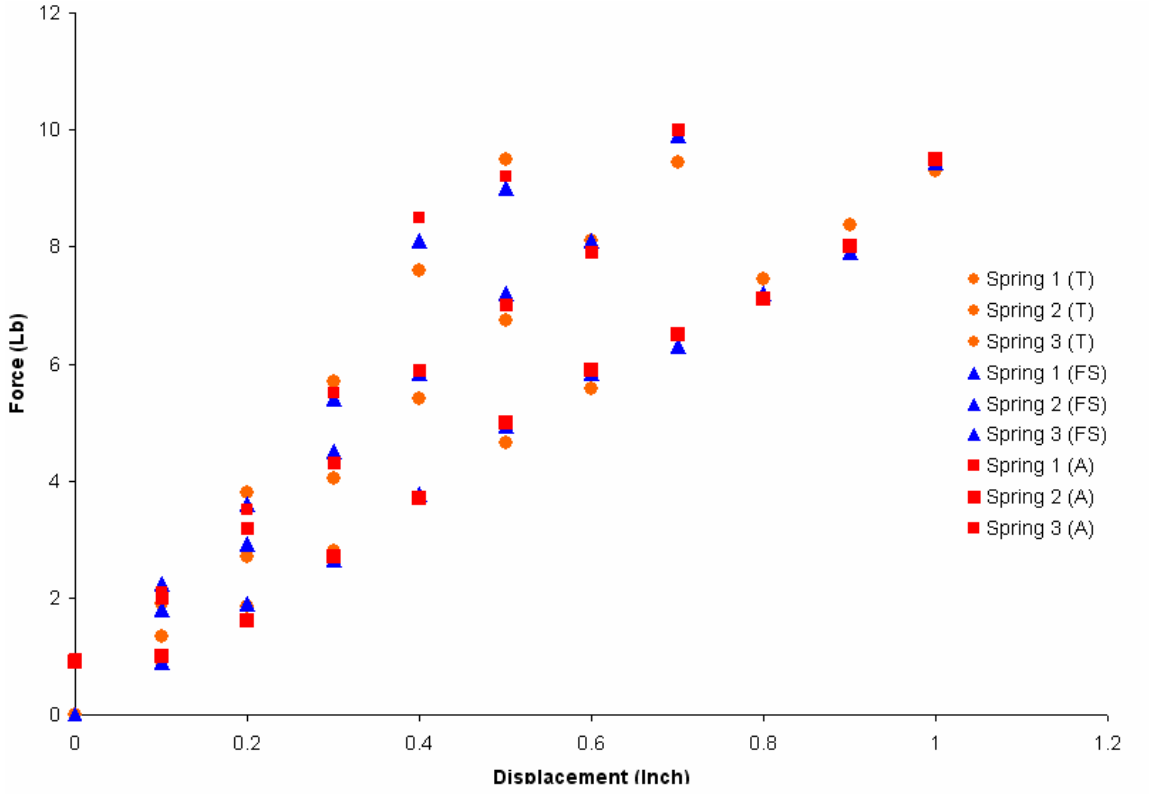

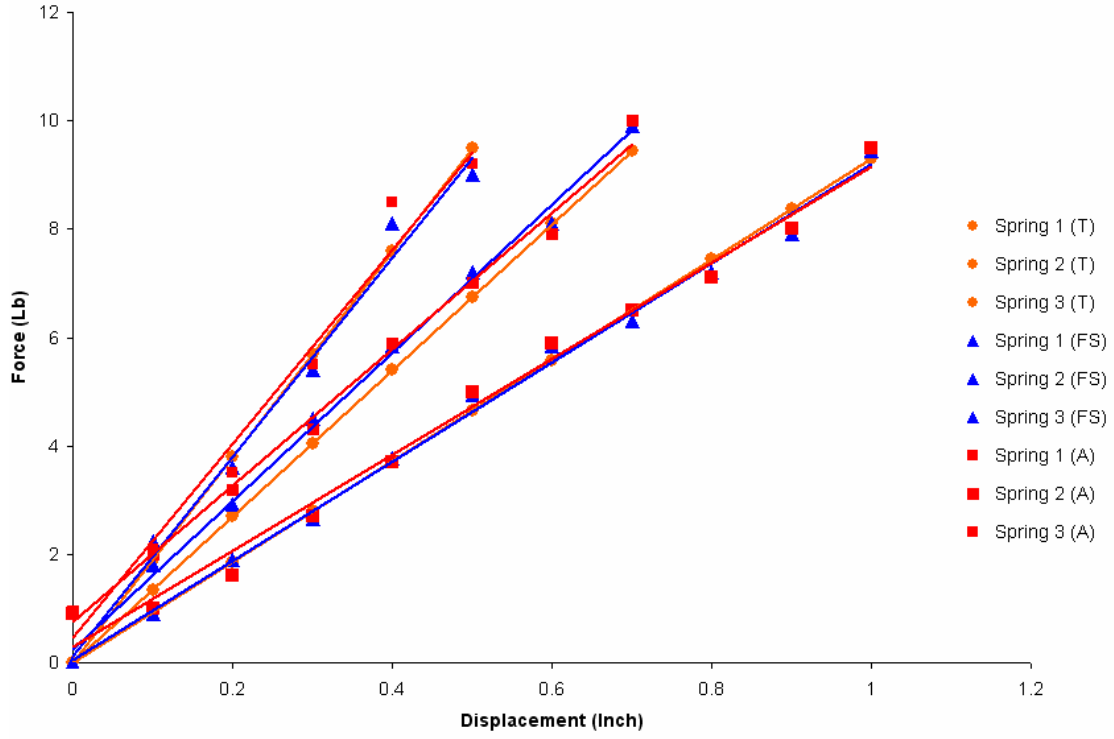

Fig: 4.2.5 Force Vs Displacement (All three springs)

Plot 2 is for spring 2, which shows the force characteristics with 13.5 lbf/inch spring. I can be observed that as the spring rate is decrease compare to spring 1 more compression of spring required to produce maximum force output. Similar result can be observed with Plot 3 of spring 3. Plot 4 shows force characteristics of all the spring on same graph to compare their results.

CHAPTER 5

CONCLUSIONS AND FUTURE WORK

5.1 Conclusion

This study proposes a new methodology in field of haptic force feedback in remote catheter insertion mechanism. It opens the door for new innovative applications for MR fluid technology in field of telerobotics. During this study robotic mechanism which can perform automatic remote catheter insertion is proposed. Based on that design prototype of surgeon station and patient table has been designed and tested for different spring stiffness. Test result shows that forces acting at patient table can be mimic at surgeon station using this system. Experimental result shows that maximum error between actual force action at patient table and resistant force induce at surgeon station are 6%. It means in remote surgery even thought the patient is thousand of miles away from surgeon, the surgeon can have same kind touch feeling operating the robotic manipulators.

5.2 Future Work

- In catheter insertion process two kind of catheter motion is required. First one is lateral motion to insert catheter in to human body and second is rotation motion which is required to steer it thought blood vessel. The prototype for catheter insertion mechanism (patient table) can be design with this rotation motion and force feedback
- More advance control system can be use to make this process real time which is a very important factor of this system.
- In this study we use rack as a catheter and a pinion to drive it as shown is chapter 2. In future this system can be improve lot by using actual catheter and design a better prototype.

- In future study flexi force Sensor can be replace more sensitive micro force sensor , so that it is more appropriate for real world application.
- In current experiment patient station and surgeon station are connected with each other through computer few meters away. But in actual world they are thousand of mile away from each other. So this mechanism should be wireless so that it can better represent actual system.

REFERENCES

REFERENCES

[1] Pierluigi bove, MD., Dan Stoianovici, "Is Telesurgery a New Reality? Our Experience with Laparoscopic and Percutaneous Procedures" JOURNAL OF ENDOUROLOGY Volume 17, Number 3, April 2003

[2] M. Cenk, Winthrop Williams, Frank Tendick, S. Shankar Sastry "Robotic s for Telesurgery: Second Generation Berkeley/UCSF Laparoscopic Telesurgical Workstation and Looking towards the Future Applications" 39th Allerton Conference On Communication Control and Computing , Monticello, IL, October, 2001

[3] Intuitive Surgical, Inc. (Nasdaq: ISRG) is the global technology leader in robotic-assisted minimally invasive surgery (MIS). www.intuitivesurgical.com/index.cfm

[4] Bar-Cohen, Y., Pfeiffer C., Mavroidis C., and Dolgin B., .MEMICA: a concept for reflecting remote-manipulator forces,. *NASA Tech Briefs*, Vol. 24, No. 2, pp. 7a-7b, 2000a.

[5] Bar-Cohen, Y., Mavroidis C., Bouzit M., Dolgin B., Harm D., Kopchok G., and White R., .Virtual reality robotic operation simulations using MEMICA haptic system,. *SmartSystems 2000: The International Conference for Smart Systems and Robotics for Medicine and Space Applications*, Houston, Texas, September 6 to 8, 2000b.

[6] Bar-Cohen, Y., Mavroidis C., Bouzit M., Pfeiffer C. and Dolgin B., .Remote mechanical mirroring using controlled stiffness and actuators (MEMICA),. Rutgers Docket Number 99-0056 A US and International PCT patent application was filed by Rutgers University in September 2000d.

[7] Lampe, D., *Materials* Database on Commercially Available Electro- and Magnetorheological Fluids (ERF and MRF), http://www.tu-dresden.de/mwilr/lampe/HAUENG.HTM, updated on 01/30/1997.

[8] Taylor, P. M., Hosseini-Sianaki A. and Varley C. J., .An electrorheological fluid-based tactile array for virtual environments,. *Proceedings of the 1996 IEEE International Conference on Robotics and Automation,* Minneapolis, MN, April 1996a, pp. 18-23.

[9] Computer Motion Inc. – Zeus http://trueforce.com/Medical_Robotics/Medical_ Robotics_ Companies/zeus.htm#top

[10] Integrated Surgical Systems www.robodoc.com/eng/index.html

[11] R Bauernschmitt, E U Schirmbeck, A Knoll, "Towards Robotic Heart Surgery; Introduction of Autonomous Procedure into an Exprimental Surgical Telemanipulator System "Published online 20 Sep 2005

[12] “Haptic Devices”, White Paper prepared by: Mimic Technologies Inc. ,4033 Aurora Ave N. ,suite 201 ,Seattle, WA 98103

[13] Force Feedback for the Karlsruhe Endoscopic Surgery Trainer http://www-kismet.iai.fzk.de/DYNAMIK/html/hifee.html

[14] L.R.P. Force Feedback Data Glove http://www.caip.rutgers.edu/~bouzit/lrp/glove.html

[15] Mourad Bouzit; Rutgers University, The State University of New Jersey “Haptic Interfaces UsingElectrorheological Fluids”http://www.robots.neu.edu/papers/ch19.pdf

[16] United States: National Library of Medicine, http://www.nlm.nih.gov/

[17] Sabine Ernst, MD; Feifan Ouyang, MD; Christian Linder, MD; Klaus Hertting, MD; Fabian Stahl, MD; Julian Chun, MD; Hitoshi Hachiya, MD; Dietmar Bänsch, MD; Matthias Antz, MD; Karl-Heinz Kuck, MD “Initial Experience With Remote Catheter Ablation Using a Novel Magnetic Navigation System” From the Second Department of Medicine, Allgemeines Krankenhaus St Georg, Hamburg, Germany.

[18] Thorsten Alexander Kern, Roland Werthschützky “Design of a haptic display for catheterization” Institute EMK, Darmstadt University of Technology, Germany

[19] Melli-Huber J.A,1 , Weinberg B.A,1, Fisch A.A, Nikitczuk J.A, Mavroidis C.A,2 , Wampler C.B “ELECTRO-RHEOLOGICAL FLUIDIC ACTUATORS FOR HAPTIC VEHICULAR INSTRUMENT CONTROLS”A Department of Mechanical and Aerospace EngineeringRutgers University, The State University of New Jersey

[20] Sławomir Bydoń ,”Facility for Induction Motor Velocity Control with a Magnetorheological Brake” Department of Process Control ,University of Mining and Metallurgy, Cracow, Poland

[21] MR Fluid Tactile force Feedback device http://www.lord.com /Default.aspx?tabid =2072& pid=3

[22] Ackermann B. and Elferich, R., “Application of Magnetorheological Fluids in Programmable Haptic Knobs," *Actuator 2000, 7th International Conference on New Actuators,* June 19-21, 2002 – Bremen, Germany

[23] Kenaley G. L. and Cutkosky M. R., "Electrorheological Fluid-Based Robotic Fingers With Tactile Sensing," *Proceedings of the 1989 IEEE International Conference on Robotics and Automation,* Scottsdale AR, pp. 132-136

[24] Laurie Kelly, Clarence W De Silva, De Silva De Silva,” Mechatronics: An Integrated Approach” - Technology – 2004

[25] Dennis Clark, Michael Owings,” Building Robot Drive Trains” -Technology – 2002

[26] Douglas W. Jones, "Control of Stepping Motors", THE Department of Computer Science, 1998

[27] Brown University's Division of Biology and Medicine comprises the Program in Biology http://biomed.brown.edu/Courses/BI108/BI108_2005_Groups/04/davinci.html

[28] The Internet Journal of Nephrology ™ ,Insertion Of Haemodialysis Catheters: Fluoroscopy Guided Placement Technique For Mal-Positioned Wires, Abdulrahman El-Kayali FRCS, MD**,**Assistant Professor & Consultant Vascular Surgeon ,Department of Surgery,Division of Vascular Surgery ,King Saud University ,Riyadh, Saudi Arabia

[29] "Robotics of Telesurgery: Second Generation Berkeley/UCSF Laparoscopic Telesurgical Workstation and Looking towards the Future Applications"., 39th Allerton Conference on communication, Control and Computing , Monicello, IL October 3-5, 2001

[30] http://www.axiom-j.co.jp/catheter.htm

[31] http://www.electrosales.com/warner/slosyn/index.htm

[32] http://www.learn-c.com/tip120.pdf#search=%22TIP%20120%22

[33] http://www.awce.com/pak5.htm

[34] http://www.ese.upenn.edu/rca/software/Labview/daqlvOverview.html

[35] http://wh7n.net/pdf/MAX232.pdf#search=%22MAX232%22

APPENDICES

Pak Vb:

Typical Circuits and Software: Connecting the Pak to its external components is simple. Supply 5V to Vdd and ground the Vss pins. Connect the two outer pins of the ceramic resonator to the RES1 and RES2 pins (the order does not matter). Ground the center pin of the resonator. Connect the RESET pin to 5V. For the simplest mode of operation leave ENABLE open and jumper B9600 and RXINV for the operating mode you desire. Of course, you'll also need to connect the RX pin to the host microprocessor. If you are using the Basic Stamp you'll have no problems using the SEROUT command to send codes to the PAK. Many BasicStamp-compatible compilers have these commands too.

Pin Connection:

Pin	Name	Type	Description
8	RX	Input	TTL-level RS232 input
9	B9600	Input	If this pin is not connected or pulled high at reset, the PAK uses 9600 baud; if this pin is low at reset, the PAK uses 2400 baud
6	Enable	Input	If this pin is not connected or high, the PAK responds to commands; if this pin is low, the PAK ignores all input
7	RXINV	Input	If this pin is not connected or high, the PAK expects inverted serial I/O (e.g., through a line driver). If this pin is low, the PAK expects true serial I/O.
28	RESET	Input	Hardware resets the PAK when low. Must be high for normal operation
1,4	Vss	Power	Ground (please ground both pins)
2	Vdd	Power	+5V
27	RES1	Clock	Connects to resonator
26	RES2	Clock	Connects to resonator
10-17	P0-P7	Output	PWM Channels
25	Multi	Input	**PAK-Vc only:** If floating or tied high, operate as PAK-Vb. If grounded, enable addressing (this pin must be set before reset)
18-22	Address	Input	**PAK-Vc only:** If Multi is low at reset, these pins set the address for this PAK. Disconnected pins are set high, so with no connections, the PAK uses address $1F. Pin 18 is the least significant bit and pin 22 is the most signifcant bit.

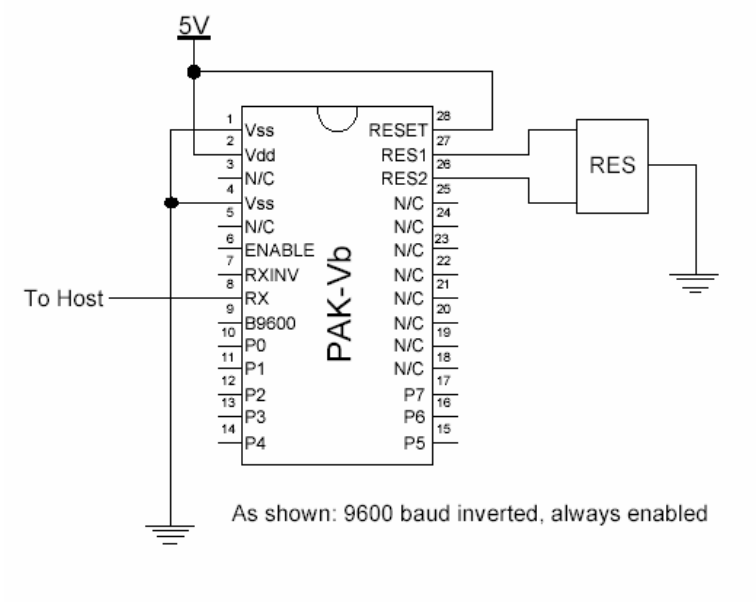

Fig:A.1 PAK - Vb

Software Command:

Code	Name	Argument	Description
$21	DUTY0	Duty cycle	Sets duty cycle (0-255) for channel 0
$23	DUTY1	Duty cycle	Sets duty cycle (0-255) for channel 1
$25	DUTY2	Duty cycle	Sets duty cycle (0-255) for channel 2
$27	DUTY3	Duty cycle	Sets duty cycle (0-255) for channel 3
$29	DUTY4	Duty cycle	Sets duty cycle (0-255) for channel 4
$2B	DUTY5	Duty cycle	Sets duty cycle (0-255) for channel 5
$2D	DUTY6	Duty cycle	Sets duty cycle (0-255) for channel 6
$2F	DUTY7	Duty cycle	Sets duty cycle (0-255) for channel 7
$81	EQUAL	None	Sets equal-area PWM
$83	PROP	None	Sets proportional PWM
$85	RESET	None	Restores PAK to power up conditions
$87	SETOUT	Direction byte	0 in direction byte sets pin to output, 1 sets pin to high impedance (default = 0)
$A0-$BF	SELECT	None	**PAK-Vc only:** When Multi is low, the PAK's input is disabled by default and will remain disabled until you send $A0 plus the PAK's address (set on the Address pins). Sending another address byte will deselect the current PAK and select another one. Note that when the PAK is deselected, its outputs continue to operate.

Specification:

Absolute Maximum Ratings

Ambient temperature under bias	-40°C to +85°C
Storage temperature	-65°C to +150°C
Voltage on VDD with respect to VSS	0 to +7.0V
Maximum current out of VSS pin	130 mA
Maximum current into VDD pin	130 mA
Maximum output current sunk by any I/O pin	45 mA
Maximum output current sourced by any I/O pin	45 mA

DC Characteristics

Parameter	Minimum	Typical	Maximum
Supply voltage	3V	5V	5.5V
Vdd rise time on power up	.05V/ms	-	-
Supply current @ 5V/50MHz	-	77mA	

PCI-6024E board:

PCI-6024E Specifications

- Available for PCI computers
- NI-DAQ driver with Measurement and Automation Explorer for easy configuration
- Two 12-bit analog outputs; 8 digital I/O lines; two 24-bit counters
- 16 analog inputs maximum; 12-bit resolution; 200 kS/s sampling rate

Fig:A.2 PCI -6024 (DAQ CARD)

assignments of the optional 50- and 68-pin connectors. A signal description follows the figures.

ACH8	34	68	ACH0
ACH1	33	67	AIGND
AIGND	32	66	ACH9
ACH10	31	65	ACH2
ACH3	30	64	AIGND
AIGND	29	63	ACH11
ACH4	28	62	AISENSE
AIGND	27	61	ACH12
ACH13	26	60	ACH5
ACH6	25	59	AIGND
AIGND	24	58	ACH14
ACH15	23	57	ACH7
DAC0OUT[1]	22	56	AIGND
DAC1OUT[1]	21	55	AOGND
RESERVED	20	54	AOGND
DIO4	19	53	DGND
DGND	18	52	DIO0
DIO1	17	51	DIO5
DIO6	16	50	DGND
DGND	15	49	DIO2
+5 V	14	48	DIO7
DGND	13	47	DIO3
DGND	12	46	SCANCLK
PFI0/TRIG1	11	45	EXTSTROBE*
PFI1/TRIG2	10	44	DGND
DGND	9	43	PFI2/CONVERT*
+5 V	8	42	PFI3/GPCTR1_SOURCE
DGND	7	41	PFI4/GPCTR1_GATE
PFI5/UPDATE*	6	40	GPCTR1_OUT
PFI6/WFTRIG	5	39	DGND
DGND	4	38	PFI7/STARTSCAN
PFI9/GPCTR0_GATE	3	37	PFI8/GPCTR0_SOURCE
GPCTR0_OUT	2	36	DGND
FREQ_OUT	1	35	DGND

[1] Not available on the 6023E

Pin configuration of 6024E DAQ interface block

MAX232:

General Description: The MAX232CPE is an RS-232 driver/receiver intended for all EIA/TIA-232E and V 28/V 24 communications interfaces, and in particular, for those applications where a +12V is not available. The MAX232CPE is particularly useful in Battery-powered systems, since their low-power shutdown mode reduces power dissipation to less than 5uW.

Applications: Portable computers, Low-power modems, Interface translation, Battery-powered RS-232 systems.

Features: Operates from single +5V power supply, Meet all EIA/TIA-232E and V.28 specifications, Two drivers and two receivers, 3-state driver and receiver outputs, Data rate 120 (kbps)

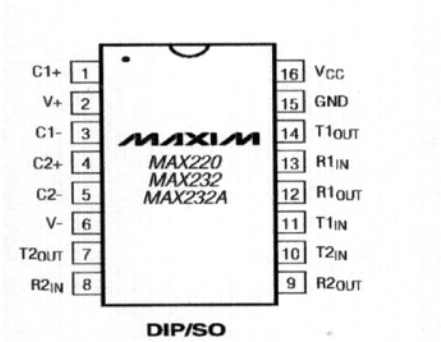

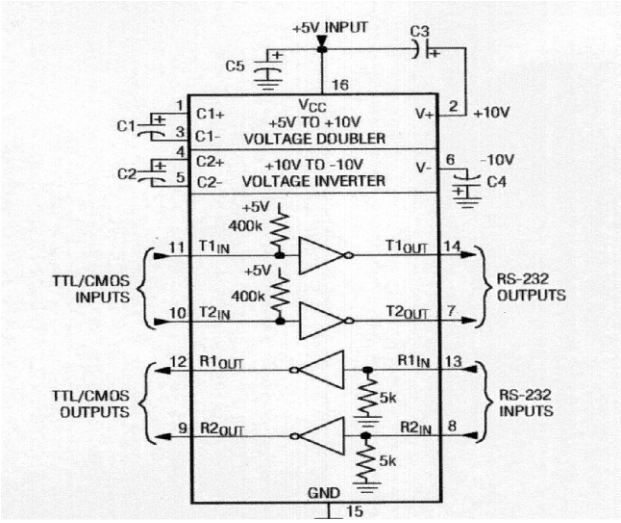

CAPACITANCE (μF)					
DEVICE	C1	C2	C3	C4	C5
MAX220	4.7	4.7	10	10	4.7
MAX232	1.0	1.0	1.0	1.0	1.0
MAX232A	0.1	0.1	0.1	0.1	0.1

Fig:A.2 MAX 232